REMOVAL

1. **REMOVE ROOF CONSOLE BOX ASSEMBLY (See page IR-12)**

2. **REMOVE ACCESSORY METER ASSEMBLY**
   (a) Using torx socket wrench (T10), remove the 5 screws and accessory meter assembly.

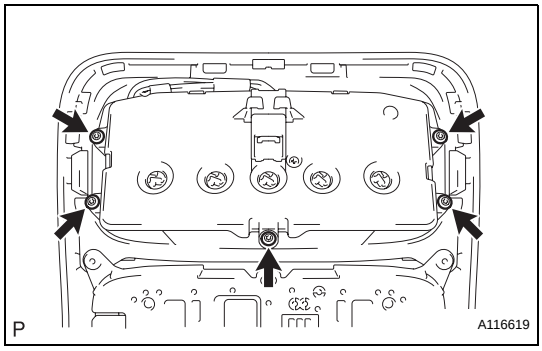

INSTALLATION

1. **INSTALL ACCESSORY METER ASSEMBLY**
   (a) Using torx socket wrench (T10), install the accessory meter assembly with the 5 screws.

2. **INSTALL ROOF CONSOLE BOX ASSEMBLY (See page IR-15)**

