DTC	01-D6	No Master

DTC	01-D7	Connection Check Error

DESCRIPTION

DTC No.	DTC Detection Condition	Trouble Area
01-D6 *1	When either of the following conditions is met: • The device that stores (stored) the code has (had) been disconnected when the ignition switch is in the ACC or ON position • The master device has (had) been disconnected when this code is stored	• Radio receiver power source circuit • Power source circuit of the component which has stored this code • AVC-LAN circuit between the radio receiver and the component which has stored this code • Component which has stored this code • Radio receiver
01-D7 *2	When either of the following conditions is met: • The device that stored the code has (had) been disconnected after the engine starts (started) • The master device has (had) been disconnected when this code is (was) stored	

HINT:
- *1: Even if no fault is present, this trouble code may be stored depending on the battery condition or engine start voltage.
- *2: When 210 seconds have elapsed after disconnecting the power supply connector of the master component with the ignition switch in the ACC or ON position, this code is stored.

NOTICE:
- **Before starting troubleshooting, be sure to clear DTCs to erase codes stored due to the reasons described in the HINT above. Then, check for DTCs and troubleshoot according to the output DTCs.**
- **The radio receiver is the master unit.**
- **Be sure to clear and recheck DTCs after the inspection is completed to confirm that no DTCs are output.**

AV

INSPECTION PROCEDURE

NOTICE:
Be sure to read DESCRIPTION before performing the following procedures.

1	CHECK RADIO RECEIVER POWER SOURCE CIRCUIT

Refer to the radio receiver power source circuit (See page AV-150).
If the power source circuit is operating normally, proceed to the next step.

NEXT

2	IDENTIFY THE COMPONENT WHICH HAS STORED THIS CODE

(a) Enter the diagnostic mode.

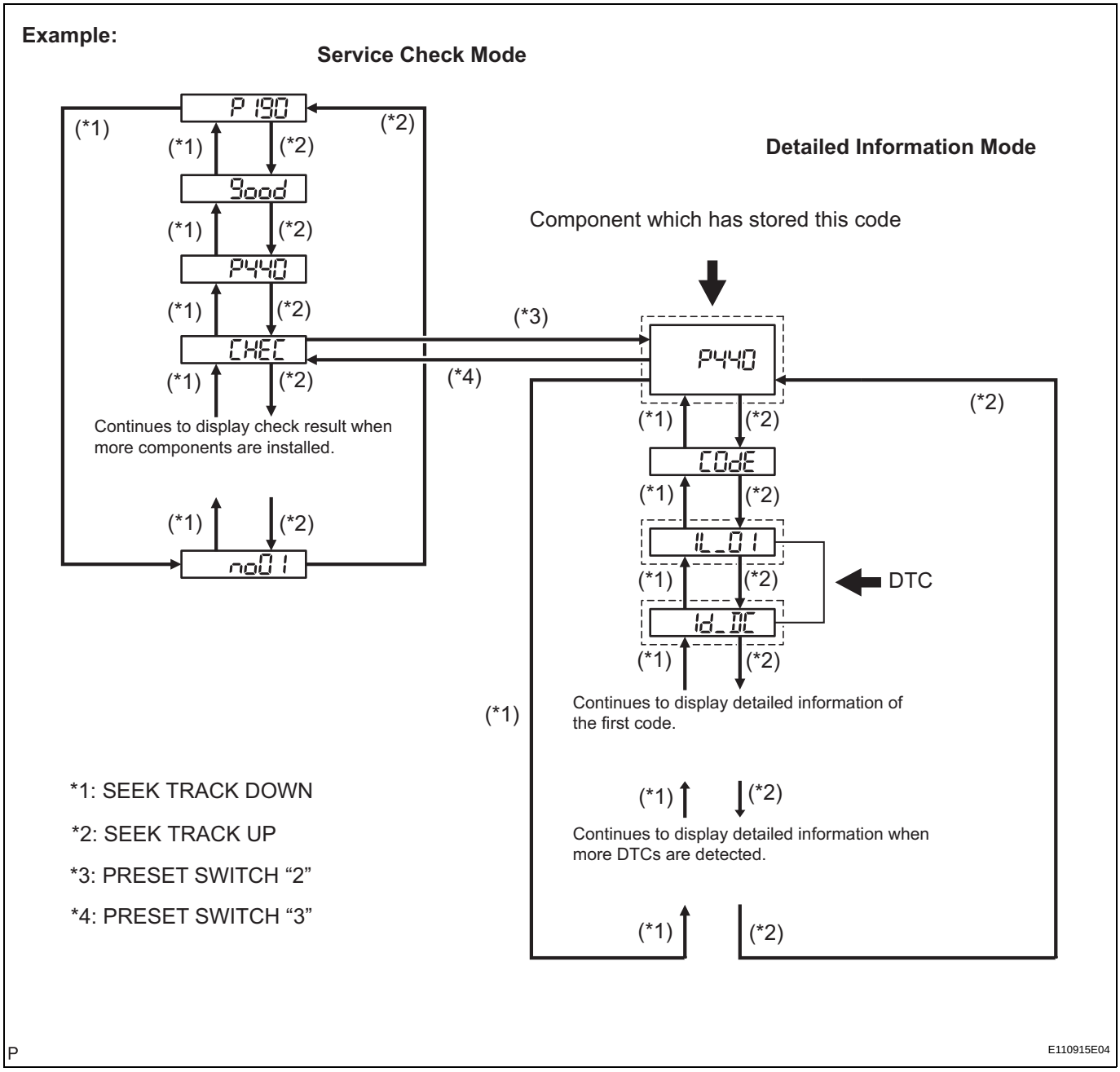

(b) Press the preset switch "3" to change to "Detailed Information Mode".
(c) Identify the component which has stored this code.

Component Table:

Component	Physical address
Stereo component amplifier	440
Television display assembly	1B0

HINT:

- "440 (stereo component amplifier)" is the component which has stored this code in the example shown in the illustration.
- For details of the DTC display, refer to "DTC CHECK/ CLEAR" (See page AV-18).

NEXT

3	CHECK POWER SOURCE CIRCUIT OF COMPONENT WHICH HAS STORED THIS CODE

(a) Inspect the power source circuit of the component which has stored this code.
If the power source circuit is operating normally, proceed to the next step.

Component Table:

Component	Proceed to
Stereo component amplifier	Stereo component amplifier power source circuit (See page AV-152)
Television display assembly	Television display assembly power source circuit (See page NS-229)

NEXT

4	INSPECT RADIO RECEIVER

10 Speaker System Wire Harness View:

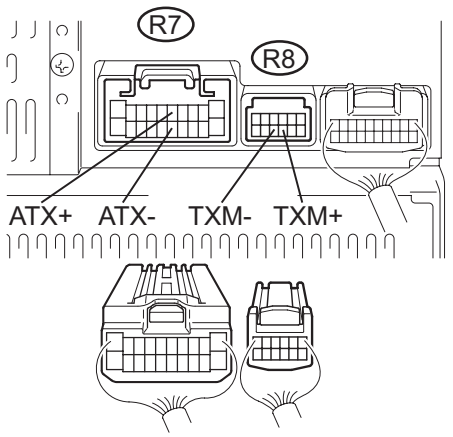

6 Speaker System Wire Harness View:

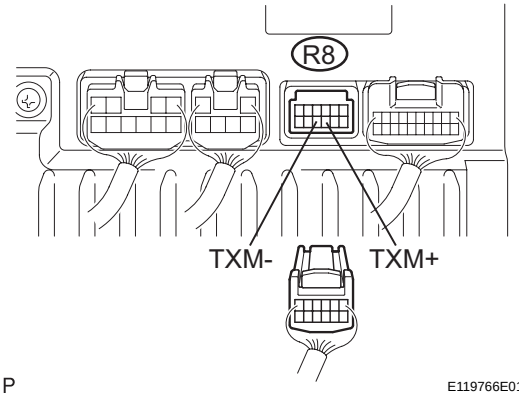

P E119766E01

(a) Disconnect the radio receiver connectors.
(b) Measure the resistance according to the value(s) in the table below.

Standard resistance

Tester Connection	Condition	Specified Condition
ATX+ (R7-5) - ATX- (R7-15) (*1)	Always	60 to 80 Ω
TXM+ (R8-9) - TXM- (R8-10)	Always	60 to 80 Ω

*1: 10 Speaker System

NG → REPLACE RADIO RECEIVER

OK

AV

5	CHECK HARNESS AND CONNECTOR (RADIO RECEIVER - COMPONENT WHICH HAS STORED THIS CODE)

HINT:
For details of the connectors, refer to the "TERMINALS OF ECU" (See page AV-14).

(a) Referring to the AVC-LAN wiring diagram below, check the AVC-LAN circuit between the radio receiver and the component which has stored this code.
  (1) Disconnect all connectors between the radio receiver and the component which has stored this code.
  (2) Check for an open or short in the AVC-LAN circuit between the radio receiver and the component which has stored this code.
  OK:
  There is no open or short circuit.

AVC-LAN WIRING DIAGRAM

*1: Master Unit

*2: Slave Unit

*3: With Rear Seat Entertainment System

10 Speaker System:

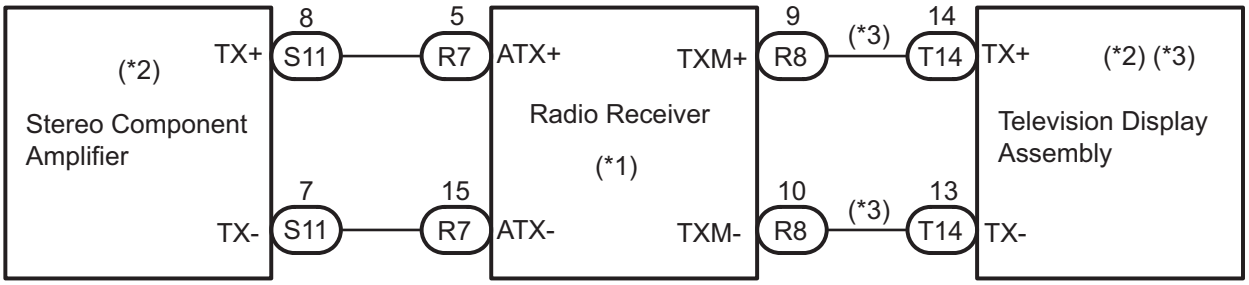

6 Speaker System:

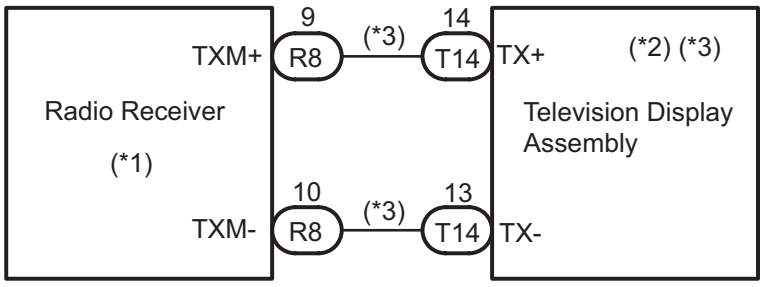

P

E119767E01

NG → **REPAIR OR REPLACE HARNESS OR CONNECTOR**

OK

6	**REPLACE COMPONENT WHICH HAS STORED THIS CODE**

(a) Replace the component which has stored this code with a normal one and check if the same problem occurs again.
OK:
Same problem does not occur.

NG → **REPLACE RADIO RECEIVER**

OK

END