DTC 01-DC Transmission Error

DESCRIPTION

DTC No.	DTC Detection Condition	Trouble Area
01-DC *1	Transmission to component shown by sub-code failed (Detecting this DTC does not always mean actual failure)	If the same sub-code is recorded in other components, check harness for power supply and communication system of all components shown by code

HINT:
*1: This code may be stored if the engine is started, idled for 60 seconds and then started again.
NOTICE:
- **Before starting troubleshooting, be sure to clear DTCs to erase codes stored due to the reasons described in the HINT above. Then, check for DTCs and troubleshoot according to the output DTCs.**
- **The radio receiver is the master unit.**
- **Be sure to clear and recheck DTCs after the inspection is completed to confirm that no DTCs are output.**

INSPECTION PROCEDURE

NOTICE:
Be sure to read DESCRIPTION before performing the following procedures.

1 CHECK FOR DTC OF OTHER COMPONENTS

AV

(a) Check if the component shown by the sub-code is displayed in the check result of the other components.
  (1) Check if "01-DC" is output for the other components.
  (2) If "01-DC" is output for any other components, check if the same physical address is displayed.
  Result

Result	Proceed to
"01-DC" is output and the same physical address is displayed	**A**
"01-DC" is not output or the same physical address is not displayed	**B**

HINT:
For the list of the components shown by sub-codes, refer to the table in step 2.

B → **Go to step 4**

A

2 IDENTIFY THE COMPONENT WHICH HAS STORED THIS CODE

(a) Enter the diagnostic mode.

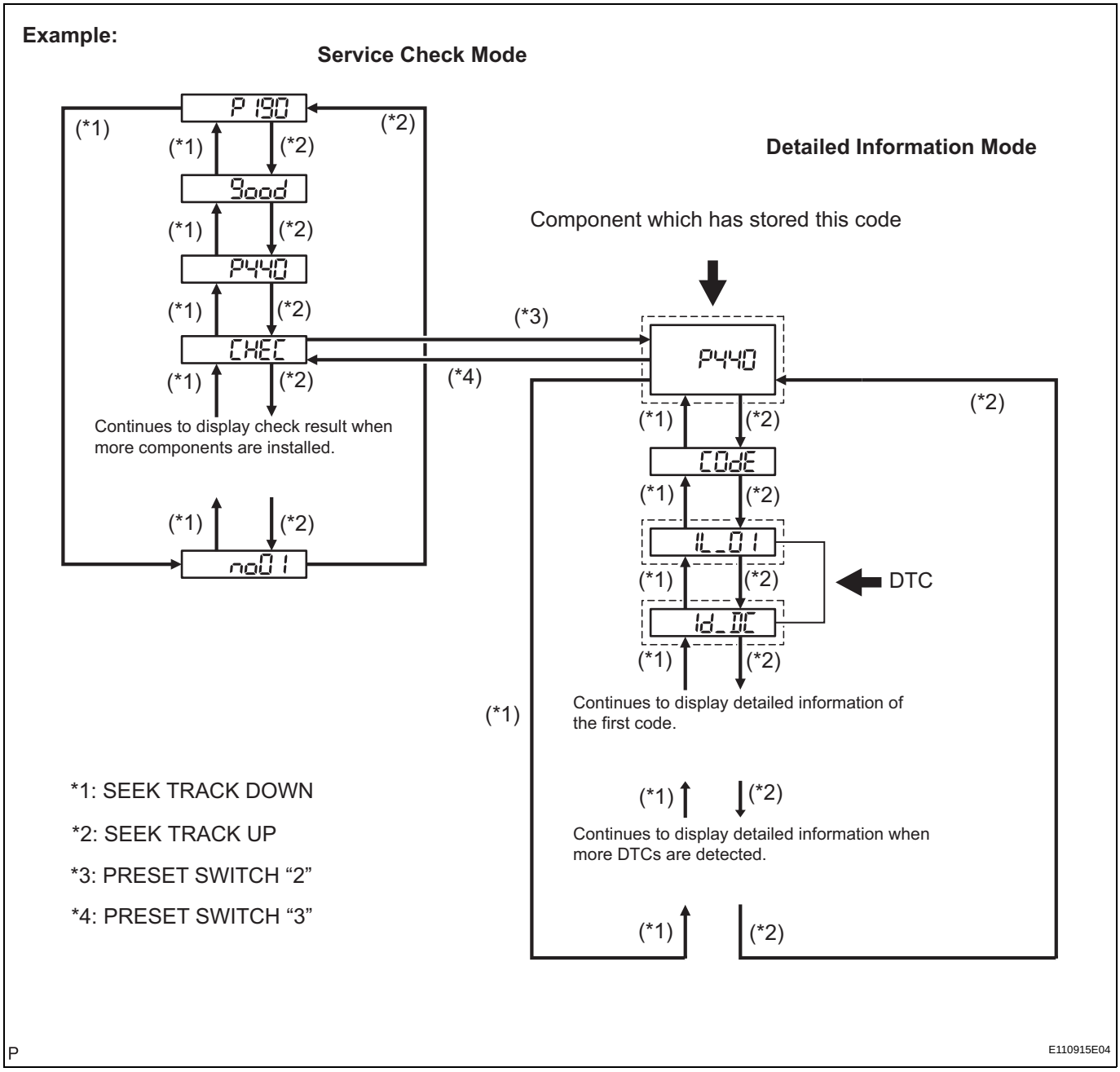

(b) Press the preset switch "3" to change to "Detailed Information Mode".
(c) Identify the component which has stored this code.

Component Table:

Component	Physical address
Stereo component amplifier	440
Television display assembly	1B0
Radio receiver	190

HINT:

- "440 (stereo component amplifier)" is the component which has stored this code in the example shown in the illustration.
- For details of the DTC display, refer to "DTC CHECK/ CLEAR" (See page AV-18).

AV

NEXT

3	CHECK COMPONENT WHICH HAS STORED THIS CODE

(a) Select the component which has stored this code.

Component Table:

Component	Proceed to
Stereo component amplifier	Stereo component amplifier communication error (See page AV-142)
Television display assembly	Television display assembly communication error (See page NS-222)
Radio receiver	Radio receiver communication error (See page AV-138)

NEXT

END

4	CLEAR DTC

(a) Clear the DTCs (See page AV-18).
HINT:
If "01-DC" is output for only one component, this may not indicate a malfunction.

NEXT

AV

5	RECHECK DTC

(a) Recheck for DTCs and check if the same trouble code occurs again.
OK:
Malfunction disappears.

NG → **Go to step 3**

OK

END