Steering Pad Switch Circuit

DESCRIPTION

This circuit sends an operation signal from the steering pad switch to the radio receiver.
If there is an open in the circuit, the audio system cannot be operated using the steering pad switch.
If there is a short in the circuit, the same condition as that when the switch is continuously depressed occurs.
Therefore, the radio receiver cannot be operated using the steering pad switch, and also the radio receiver itself cannot function.

WIRING DIAGRAM

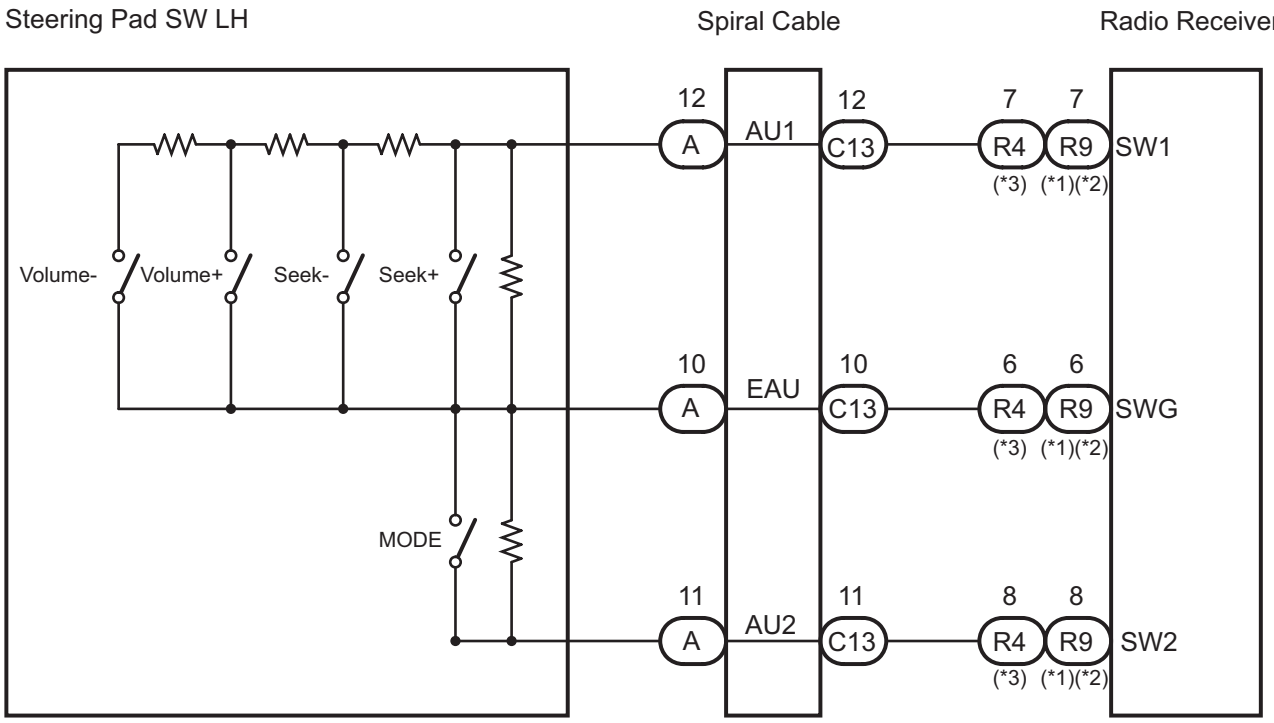

*1: 10 Speaker without Navigation System

*2: 6 Speaker with Rear Seat Entertainment System

*3: 6 Speaker without Rear Seat Entertainment System

P

E125098E01

INSPECTION PROCEDURE

NOTICE:

The vehicle is equipped with an SRS (Supplemental Restraint System) which includes components such as airbags. Before servicing (including removal or installation of parts), be sure to read the precautionary notice for the Supplemental Restraint System (See page RS-434).

1	**INSPECT RADIO RECEIVER**

Wire Harness View (*1) (*2):

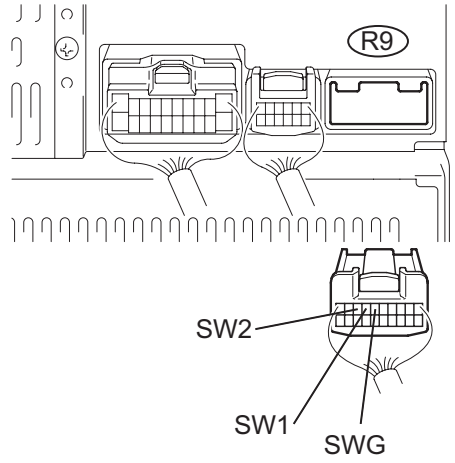

Wire Harness View (*3):

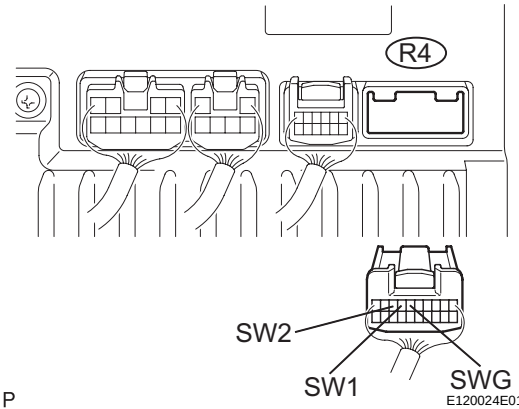

(a) Disconnect the radio receiver connector R4 or R9.
(b) Measure the resistance according to the value(s) in the table below.

Standard resistance

Tester connection	Condition	Specified condition
SW1 - SWG	No switch is pushed	Approx. 100 kΩ
SW1 - SWG	SEEK+ switch: push	Approx. 0 Ω
SW1 - SWG	SEEK- switch: push	Approx. 0.3 kΩ
SW1 - SWG	VOL+ switch: push	Approx. 1 kΩ
SW1 - SWG	VOL- switch: push	Approx. 3.2 kΩ
SW2 - SWG	No switch is pushed	Approx. 100 kΩ
SW2 - SWG	MODE switch: push	Approx. 0 Ω

*1: 10 Speaker without Navigation System
*2: 6 Speaker with Rear Seat Entertainment System
*3: 6 Speaker without Rear Seat Entertainment System

NG → **Go to step 2**

OK

PROCEED TO NEXT CIRCUIT INSPECTION SHOWN IN PROBLEM SYMPTOMS TABLE

2	**INSPECT STEERING PAD SWITCH ASSEMBLY**

(a) Disconnect the steering pad switch LH connector.
(b) Measure the resistance according to the values in the table below.

AV

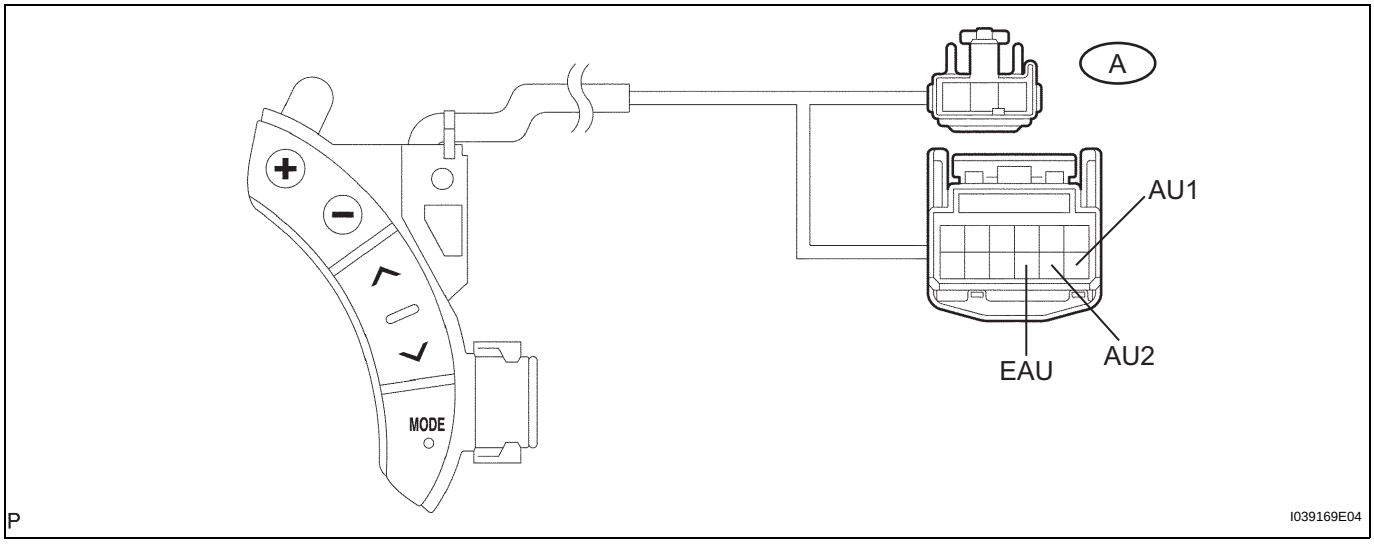

Standard resistance

Tester connection	Condition	Specified condition
AU1 - EAU	No switch is pushed	Approx. 100 kΩ
AU1 - EAU	SEEK+ switch: push	Approx. 0 Ω
AU1 - EAU	SEEK- switch: push	Approx. 0.3 kΩ
AU1 - EAU	VOL+ switch: push	Approx. 1 kΩ
AU1 - EAU	VOL- switch: push	Approx. 3.2 kΩ
AU2 - EAU	No switch is pushed	Approx. 100 kΩ
AU2 - EAU	MODE switch: push	Approx. 0 Ω

AV

NG → **REPLACE STEERING PAD SWITCH ASSEMBLY**

OK

3	INSPECT SPIRAL CABLE

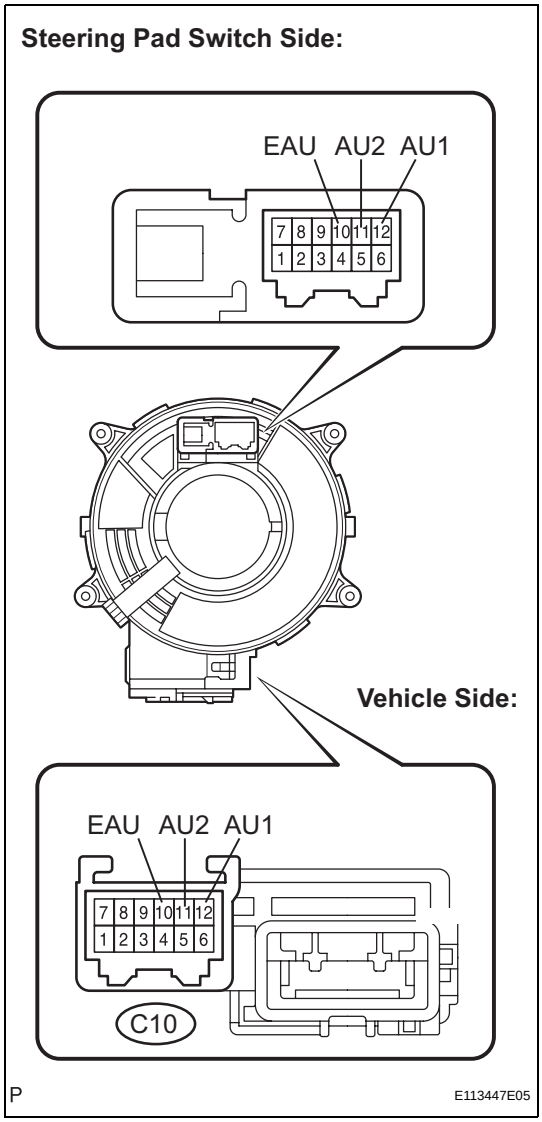

(a) Disconnect the steering pad switch and spiral cable connectors.

(b) Measure the resistance according to the value(s) in the table below.

Standard resistance

Tester connection	Spiral Cable Position	Specified condition
EAU - EAU	Center	Below 1 Ω
	2.5 rotations to the left	
	2.5 rotations to the right	
AU1 - AU1	Center	Below 1 Ω
	2.5 rotations to the left	
	2.5 rotations to the right	
AU2 - AU2	Center	Below 1 Ω
	2.5 rotations to the left	
	2.5 rotations to the right	

NOTICE:
The spiral cable is an important part of the SRS airbag system. Incorrect removal or installation of the spiral cable may prevent the airbag from deploying. Be sure to read the page shown in the brackets (See page RS-434).

NG → **REPLACE SPIRAL CABLE**

OK

REPAIR OR REPLACE HARNESS OR CONNECTOR (SPIRAL CABLE - RADIO RECEIVER)

AV