RADIO RECEIVER

COMPONENTS

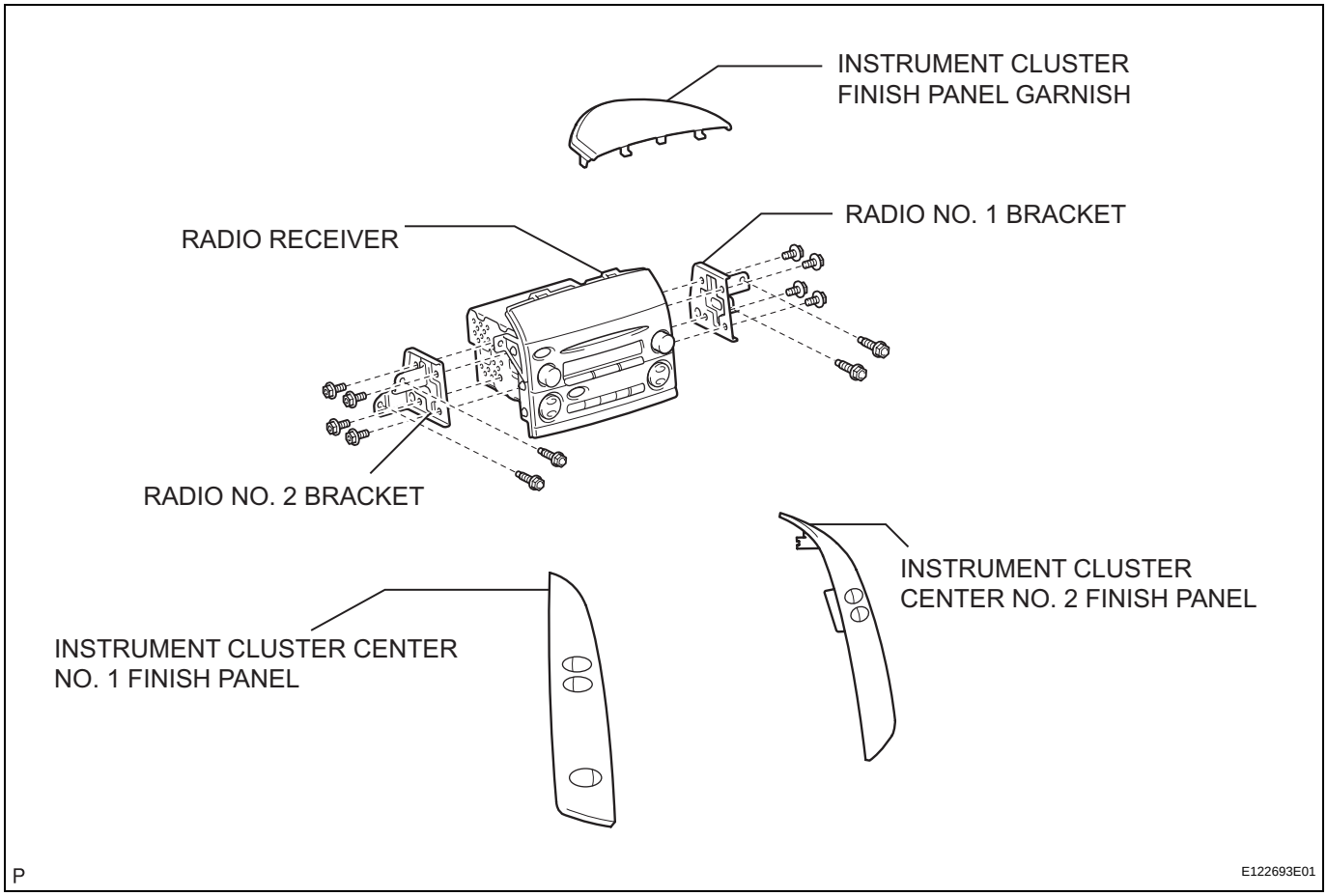

REMOVAL

1. **REMOVE INSTRUMENT CLUSTER CENTER NO. 1 FINISH PANEL (See page IP-8)**
2. **REMOVE INSTRUMENT CLUSTER CENTER NO. 2 FINISH PANEL (See page IP-8)**
3. **REMOVE INSTRUMENT CLUSTER FINISH PANEL GARNISH (See page IP-9)**
4. **REMOVE RADIO RECEIVER**
   (a) Remove the 4 screws.
   (b) Disconnect the connectors and remove the radio receiver with bracket.

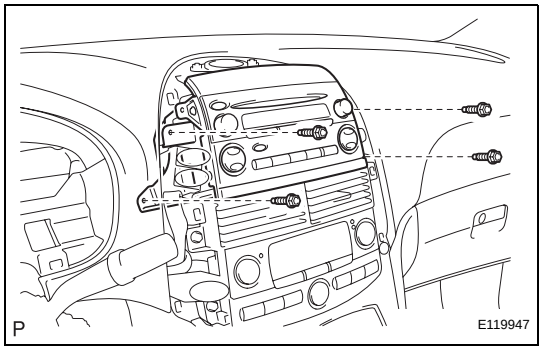

5. **REMOVE RADIO NO. 1 BRACKET**
   (a) Remove the 4 screws and radio No. 1 bracket.

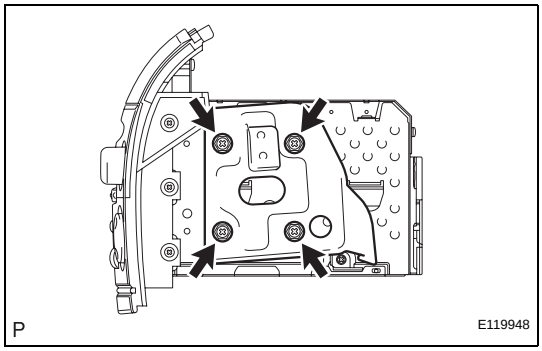

6. **REMOVE RADIO NO. 2 BRACKET**
   (a) Remove the 4 screws and radio No. 2 bracket.

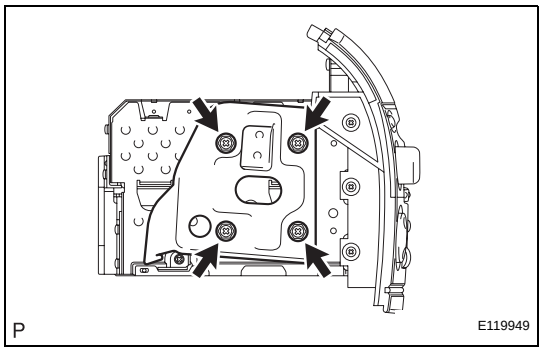

INSTALLATION

1. **INSTALL RADIO NO. 2 BRACKET**
   (a) Install radio No. 2 bracket with the 4 screws.

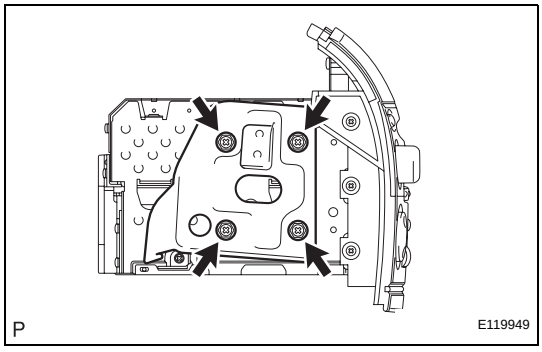

AV

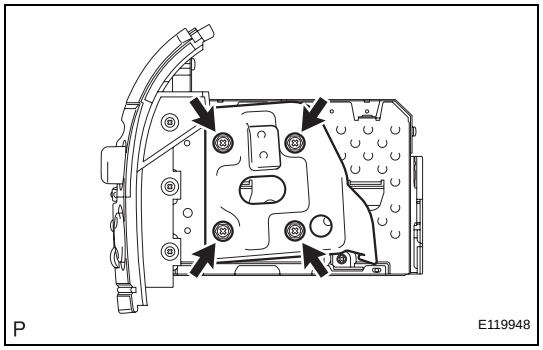

2. INSTALL RADIO NO. 1 BRACKET

(a) Install radio No. 1 bracket with the 4 screws.

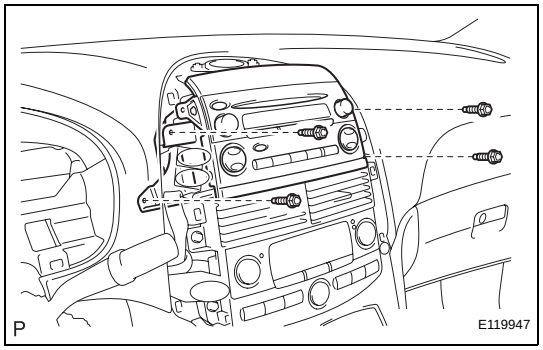

3. INSTALL RADIO RECEIVER

(a) Connect the connector.

(b) Install the radio receiver with the 4 screws.

4. INSTALL INSTRUMENT CLUSTER FINISH PANEL GARNISH

5. INSTALL INSTRUMENT CLUSTER CENTER NO. 2 FINISH PANEL

6. INSTALL INSTRUMENT CLUSTER CENTER NO. 1 FINISH PANEL