Speaker Circuit

DESCRIPTION

- When the vehicle has a built-in type amplifier, a sound signal is sent from the radio receiver to the speakers via the "6 Speaker System" circuit.
- When the vehicle has a separate type amplifier, a sound signal from the radio receiver is amplified by the stereo component amplifier and then transmitted to the speaker via the "10 Speaker System" circuit.

If there is a short in this circuit, the stereo component amplifier detects it and stops output to the speakers. Thus sound cannot be heard from the speakers even if there is no malfunction in the stereo component amplifier or speakers.

WIRING DIAGRAM

6 Speaker System:

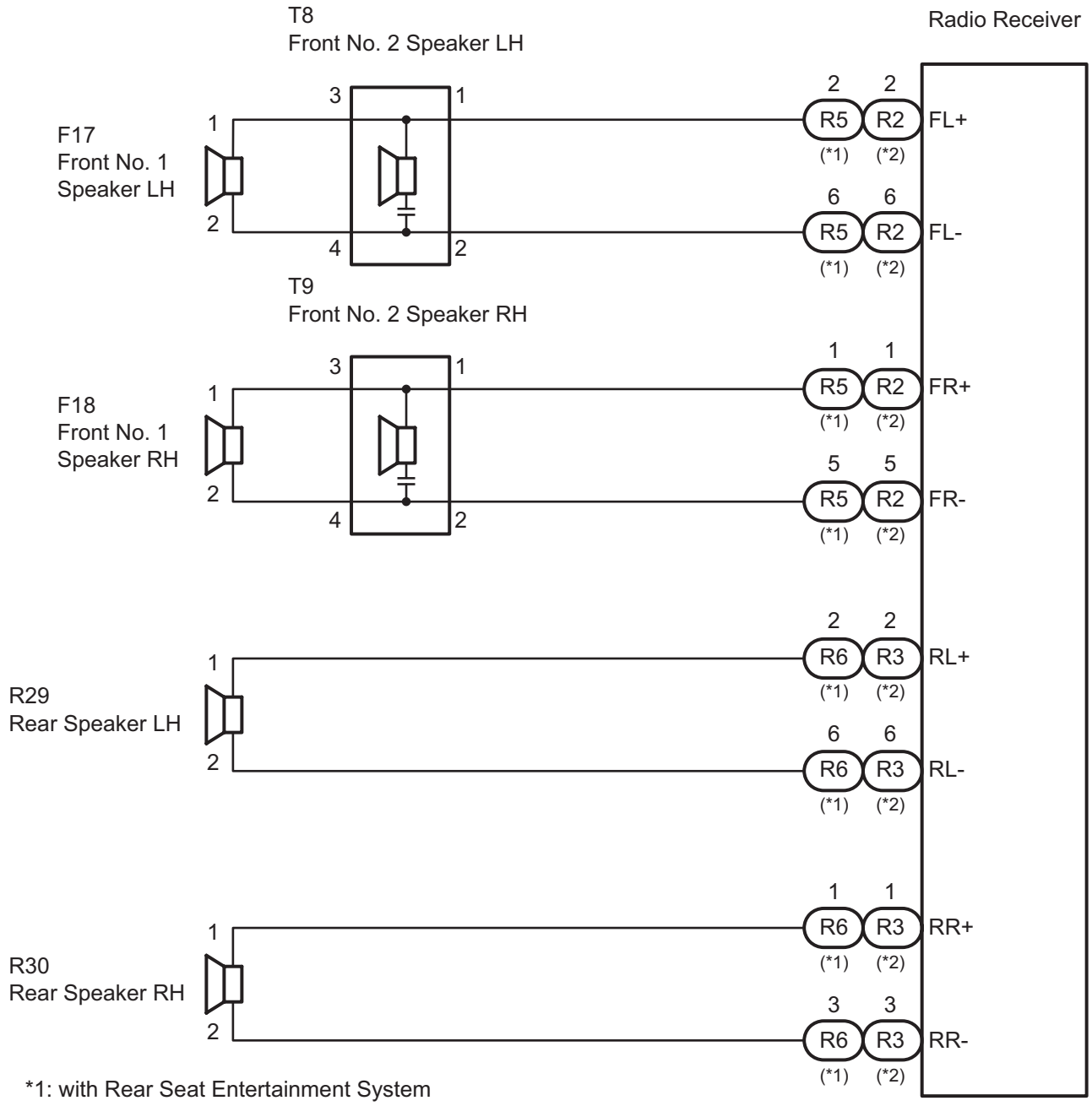

*1: with Rear Seat Entertainment System

*2: without Rear Seat Entertainment System

P

E125101E02

AV

10 Speaker System:

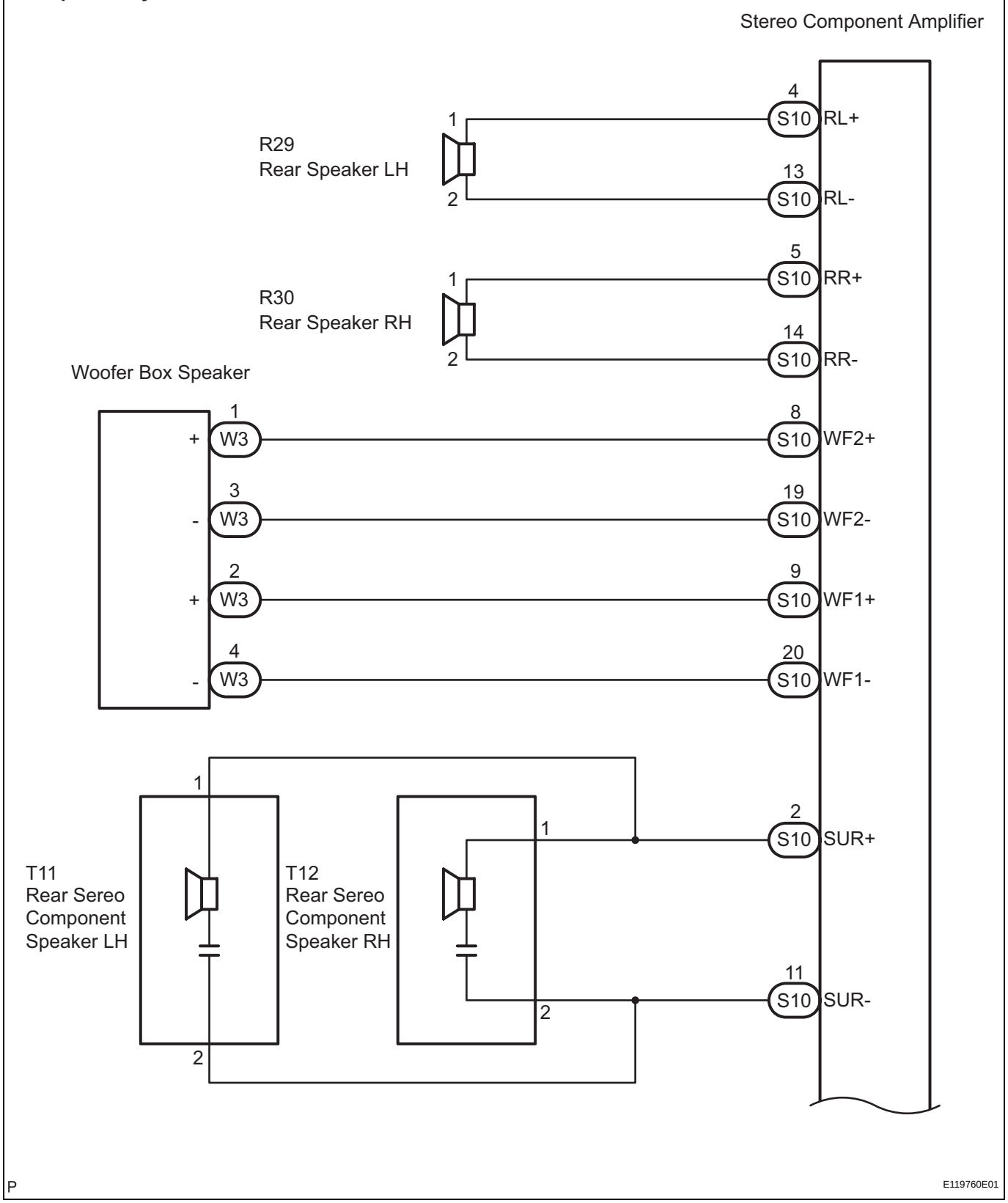

AV

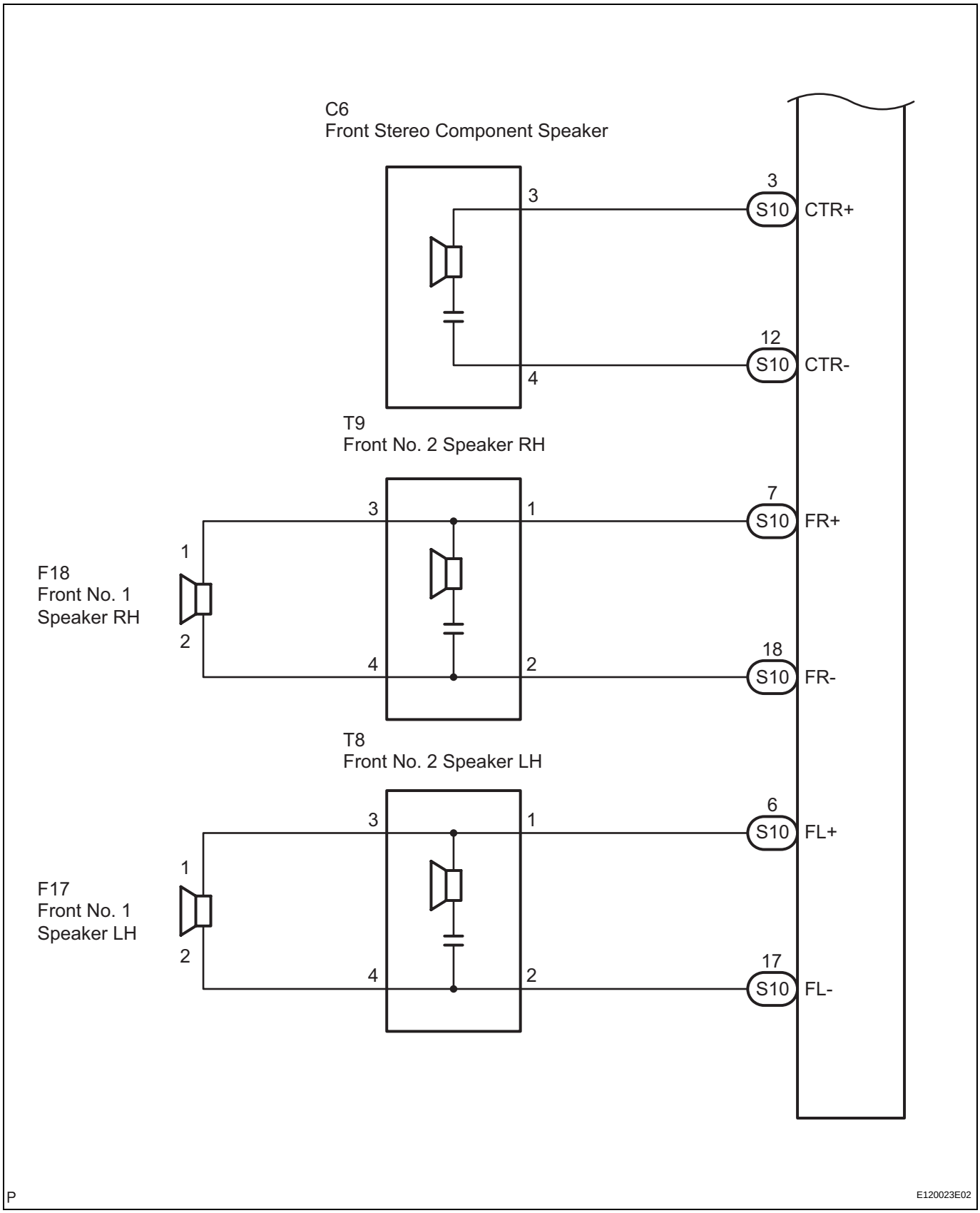
C6
Front Stereo Component Speaker
3
3
S10
CTR+
12
S10
CTR-
4
T9
Front No. 2 Speaker RH
7
3
1
S10
FR+
1
F18
Front No. 1
Speaker RH
2
18
4
2
S10
FR-
T8
Front No. 2 Speaker LH
6
3
1
S10
FL+
1
F17
Front No. 1
Speaker LH
2
17
4
2
S10
FL-
P
E120023E02

AV

INSPECTION PROCEDURE

1	CHECK HARNESS AND CONNECTOR

Wire Harness View:

Stereo Component Amplifier (10 Speaker System)

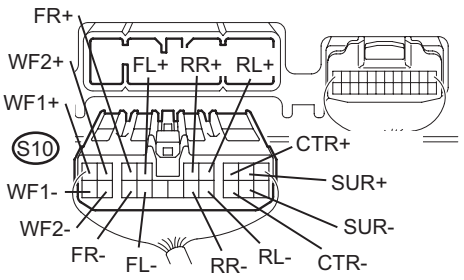

Wire Harness View:

Radio Receiver (6 Speaker System)

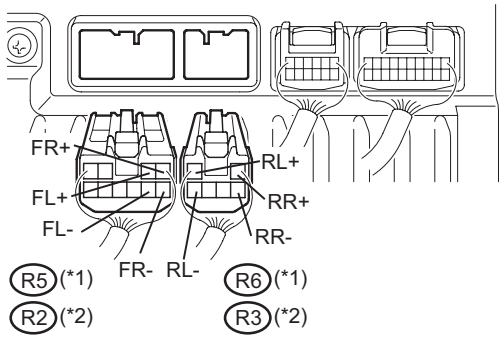

Connector Front VIew:

Front No. 1 Speaker

Rear Speaker

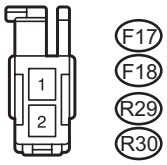

Connector Front View:

Front No. 2 Speaker

Front Stereo Component Speaker (*3)

Rear Stereo Component Speaker (*3)

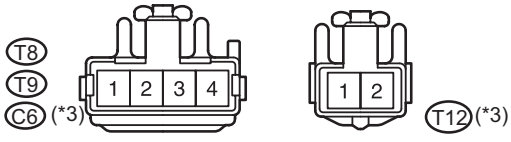

*1: 6 Speaker with Rear Seat Entertainment System

*2: 6 Speaker without Rear Seat Entertainment System

*3: 10 Speaker System

E125102E03

(a) Disconnect the connectors shown in the illustration from the stereo component amplifier or radio receiver and speakers.

(b) 10 Speaker System:
Measure the resistance between each of the front No. 2 speakers and the stereo component amplifier to check for an open circuit in the wire harness.
Standard resistance:
Below 1 Ω

(c) 6 speaker System:
Measure the resistance between each of the front No. 2 speakers and the radio receiver to check for an open circuit in the wire harness.
Standard resistance:
Below 1 Ω

(d) Measure the resistance between each of the front No. 2 speakers and each of the front No. 1 speakers to check for an open circuit in the wire harness.
Standard resistance:
Below 1 Ω

(e) 10 Speaker System:
Measure the resistance between each of the rear speakers and the stereo component amplifier to check for an open circuit in the wire harness.
Standard resistance:
Below 1 Ω

(f) 6 Speaker System:
Measure the resistance between each of the rear speakers and the radio receiver to check for an open circuit in the wire harness.
Standard resistance:
Below 1 Ω

(g) 10 Speaker System:
Measure the resistance between each of the rear stereo component speakers and the stereo component amplifier to check for an open circuit in the wire harness.
Standard resistance:
Below 1 Ω

(h) 10 Speaker System:
Measure the resistance between the front stereo component speaker and the stereo component amplifier to check for an open circuit in the wire harness.
Standard resistance:
Below 1 Ω

AV

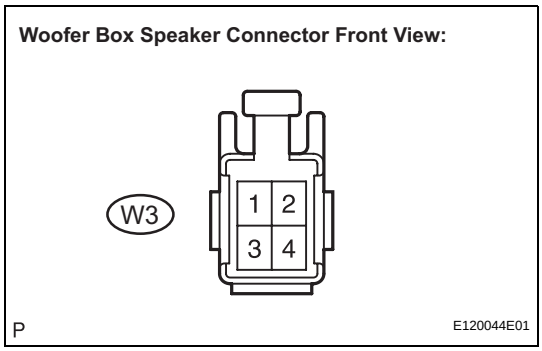

(i) 10 Speaker System:
Measure the resistance between the woofer box speaker and the stereo component amplifier to check for an open circuit in the wire harness.
Standard resistance:
Below 1 Ω

(j) Measure the resistance between the each speaker and body ground to check for a short circuit in the wire harness.
Standard resistance:
10 kΩ or higher

NG → **REPAIR OR REPLACE HARNESS OR CONNECTOR**

OK

2	**INSPECT FRONT NO. 1 SPEAKER**

(a) Resistance check.
(1) Measure the resistance between the terminals of the speaker.
Standard resistance:
10 Speaker System:
4 to 6 Ω
6 Speaker System:
Approximately 4 Ω

NG → **REPLACE FRONT NO. 1 SPEAKER**

OK

3	**INSPECT REAR SPEAKER**

(a) Resistance check.
(1) Measure the resistance between the terminals of the speaker.
10 Speaker System:
Approximately 2.4 Ω
6 Speaker System:
Approximately 4 Ω

NG → **REPLACE REAR SPEAKER**

OK

4	**INSPECT FRONT NO. 2 SPEAKER**

(a) Check that the malfunction disappears when another speaker in good condition is installed.
Standard:
Malfunction disappears.
HINT:
- Connect all the connectors to the front No. 2 speaker.

AV

- When there is a possibility that either the right or left front speaker is detective, inspect by interchanging the right one with the left one.
- Perform the above inspection on both LH and RH sides.

OK → **REPLACE FRONT NO. 2 SPEAKER**

NG

5 CONFIRM MODEL

Result

Result	Proceed to
10 Speaker System	A
6 Speaker System	B

B → **PROCEED TO NEXT CIRCUIT INSPECTION SHOWN IN PROBLEM SYMPTOMS TABLE**

A

6 INSPECT WOOFER BOX SPEAKER

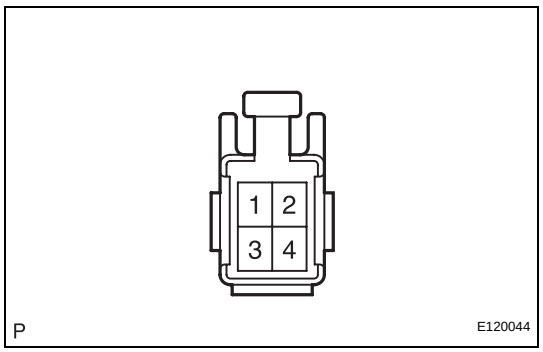

(a) Resistance check.
(1) Measure the resistance according to the value(s) in the table below.
NOTICE:
The speaker should not be removed for checking.
Standard resistance

Tester connection	Condition	Specified condition
1 - 3	Always	Approximately 1.2 Ω
2 - 4	Always	Approximately 1.2 Ω

NG → **REPLACE WOOFER BOX SPEAKER**

OK

7 INSPECT REAR STEREO COMPONENT SPEAKER

(a) Check that the malfunction disappears when another speaker in good condition is installed.

OK:
Malfunction disappears.

HINT:
- Connect all the connectors to the rear stereo component speaker.
- When there is a possibility that either the right or left rear speaker is detective, inspect by interchanging the right one with the left one.

AV

OK → **REPLACE REAR STEREO COMPONENT SPEAKER**

NG

8	**INSPECT FRONT STEREO COMPONENT SPEAKER**

(a) Resistance check.
(1) Measure the resistance between the terminals of the speaker.
Standard resistance:
1.2 to 2.2 Ω

NG → **REPLACE FRONT STEREO COMPONENT SPEAKER**

OK

PROCEED TO NEXT CIRCUIT INSPECTION SHOWN IN PROBLEM SYMPTOMS TABLE