REMOVAL

1. **REMOVE REAR DOOR SCUFF PLATE LH (See page IR-7)**
2. **REMOVE REAR DOOR WEATHERSTRIP LH (See page IR-7)**
3. **REMOVE BACK DOOR WEATHERSTRIP**
4. **REMOVE BACK DOOR SCUFF PLATE (See page IR-8)**
5. **REMOVE QUARTER TRIM FRONT PANEL ASSEMBLY LH (See page IR-9)**
6. **REMOVE VIDEO(VIDEO ADAPTER) TERMINAL**
   (a) Release the 4 claw fittings and remove the video (video adapter) terminal.

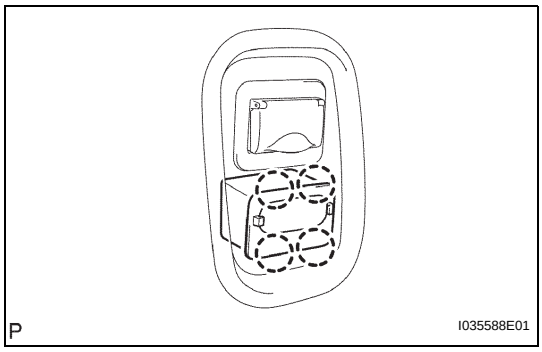

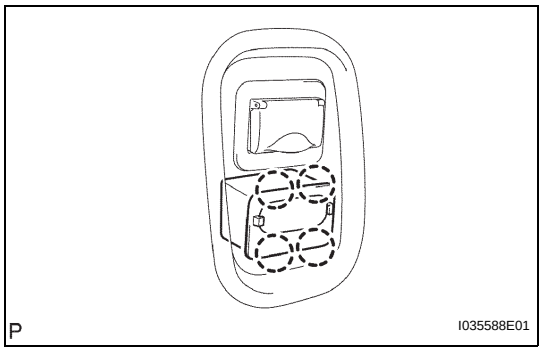

INSTALLATION

1. **INSTALL VIDEO(VIDEO ADAPTER) TERMINAL**
   (a) Engage the 4 claws to install the video (video adapter) terminal.
2. **INSTALL QUARTER TRIM FRONT PANEL ASSEMBLY LH**
3. **INSTALL BACK DOOR SCUFF PLATE**
4. **INSTALL BACK DOOR WEATHERSTRIP**
5. **INSTALL REAR DOOR WEATHERSTRIP LH**
6. **INSTALL REAR DOOR SCUFF PLATE LH**