AUDIO TERMINAL

COMPONENTS

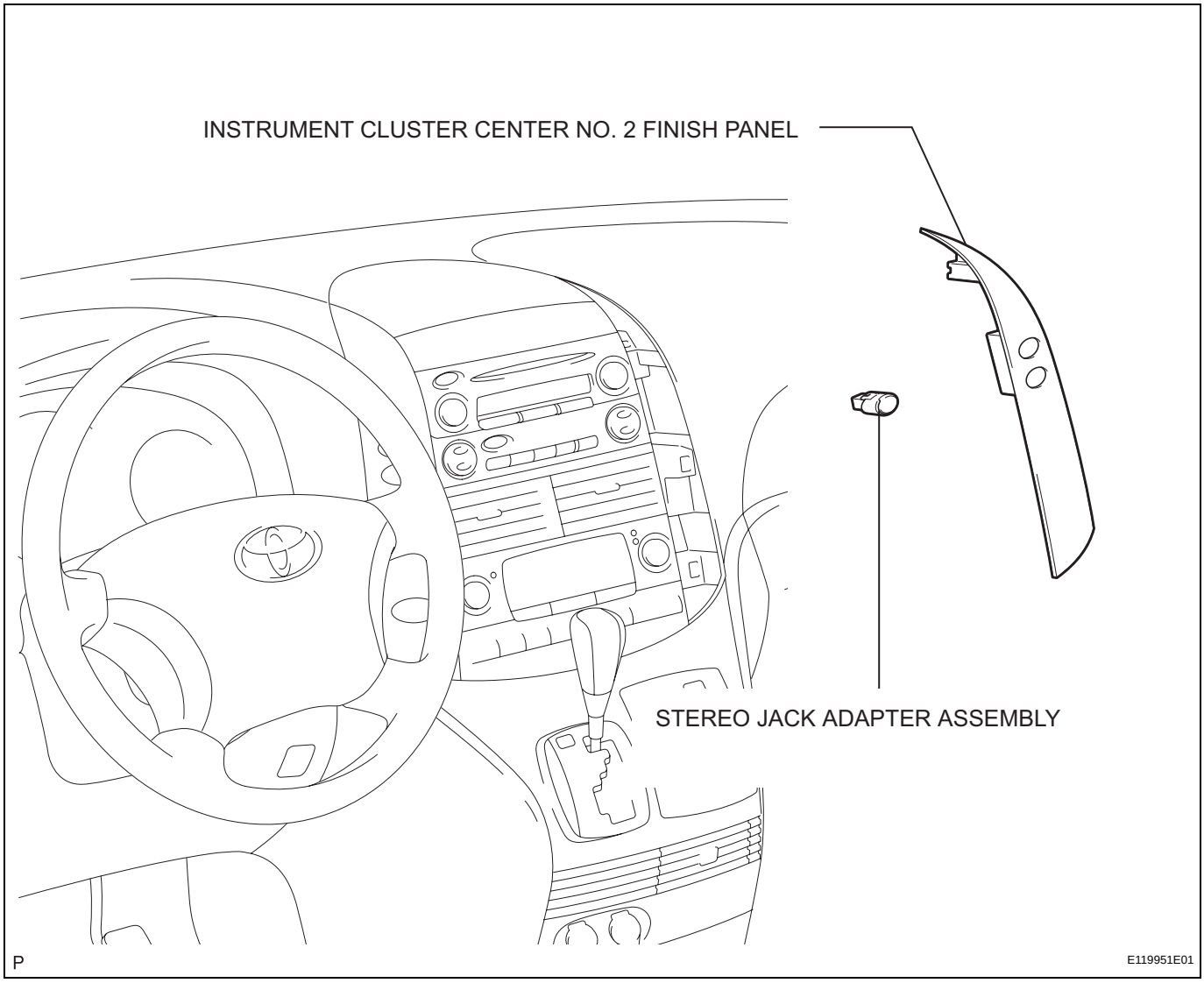

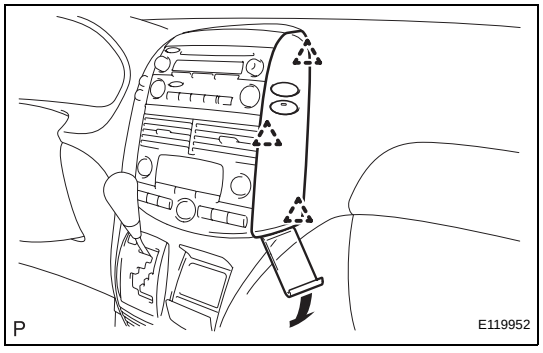

REMOVAL

1. **REMOVE INSTRUMENT CLUSTER CENTER NO. 2 FINISH PANEL**
   (a) Using a moulding remover, disengage the 3 clips.
   (b) Disconnect the connector and remove the instrument cluster center No. 2 finish panel.

AV

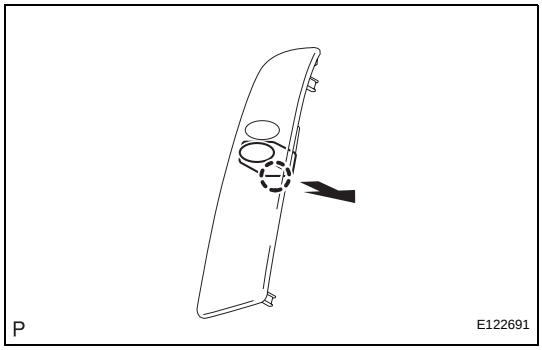

2. REMOVE STEREO JACK ADAPTER ASSEMBLY

(a) Disengage the claw and remove the stereo jack adapter assembly.

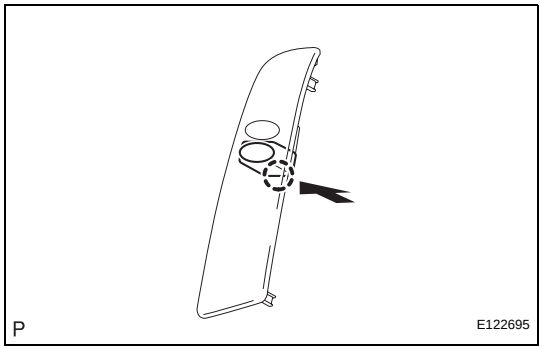

INSTALLATION

1. INSTALL STEREO JACK ADAPTER ASSEMBLY

(a) Engage the claw to install the stereo jack adapter assembly.

2. INSTALL INSTRUMENT CLUSTER CENTER NO. 2 FINISH PANEL

(a) Connect the connector.

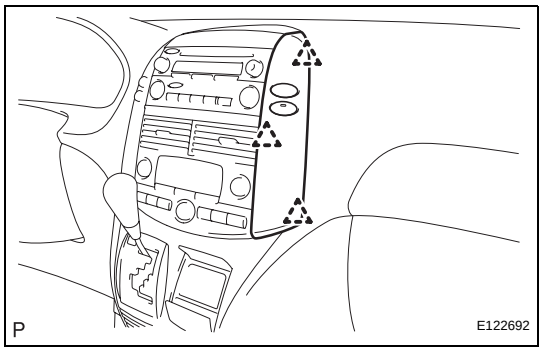

(b) Engage the 3 clips to install the instrument cluster center No. 2 finish panel.