Map Display Incomplete

INSPECTION PROCEDURE

1	CHECK MAP DISC

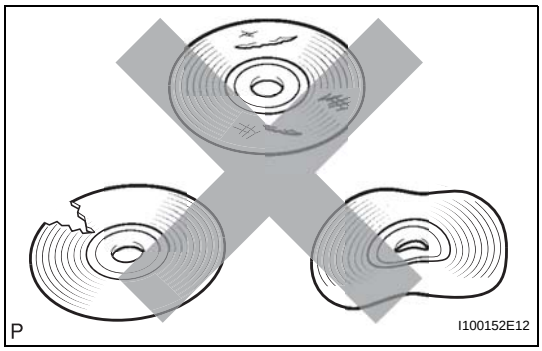

(a) Check that the map disc is not deformed or cracked.
OK:
No deformations or cracks on map disc.

NG → **REPLACE MAP DISC**

OK

2	CHECK DISPLAY

(a) Check that displays other than the navigation display are complete.
OK:
No other incomplete displays are found.

OK → **PROCEED TO NEXT CIRCUIT INSPECTION SHOWN IN PROBLEM SYMPTOMS TABLE**

NG

REPLACE RADIO AND NAVIGATION ASSEMBLY

NS

Route cannot be Calculated

INSPECTION PROCEDURE

1	CHECK MAP DISC

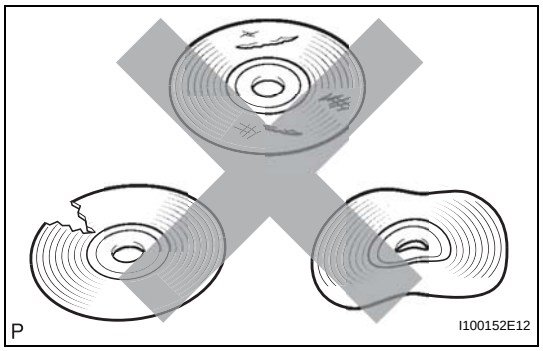

(a) Check that the map disc is not deformed or cracked.
OK:
No deformations or cracks on map disc.

NG → **REPLACE MAP DISC**

OK

2	SET DESTINATION

(a) Set another destination and check if the system can calculate the route correctly.
OK:
Route can be correctly calculated.

NG → **PROCEED TO NEXT CIRCUIT INSPECTION SHOWN IN PROBLEM SYMPTOMS TABLE**

OK

NORMAL OPERATION