Steering Pad Switch Circuit

DESCRIPTION

This circuit sends an operation signal from the steering pad switch to the radio receiver.
If there is an open in the circuit, the navigation system cannot be operated using the steering pad switch.
If there is a short in the circuit, the resulting condition is the same as if the switch were continuously depressed. Therefore, the radio and navigation assembly cannot be operated using the steering pad switch, and the radio and navigation assembly itself cannot function.

WIRING DIAGRAM

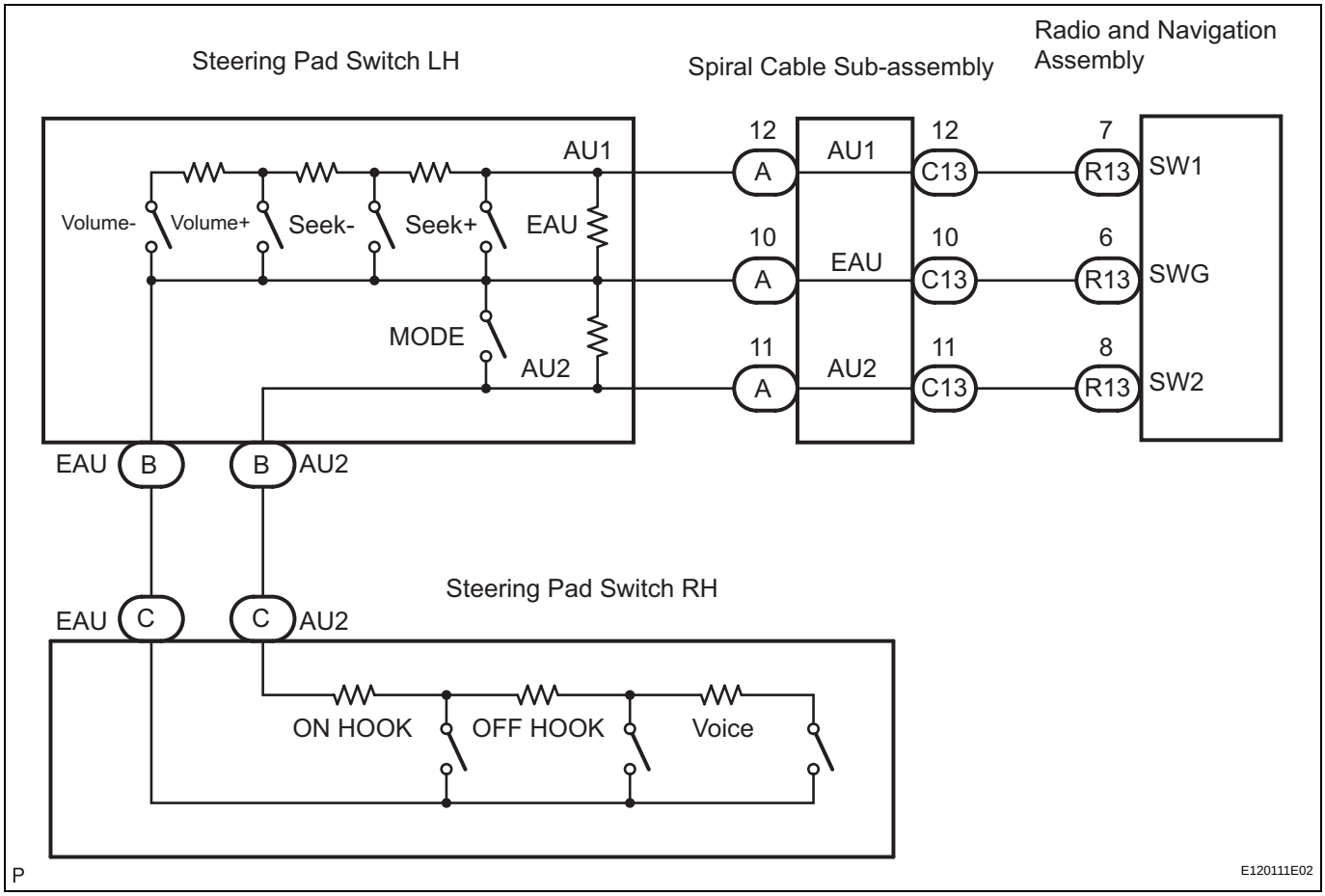

INSPECTION PROCEDURE

NOTICE:

The vehicle is equipped with an SRS (Supplemental Restraint System) such as the airbags. Before servicing (including removal or installation of parts), be sure to read the precautionary notice for the Supplemental Restraint System (See page RS-1).

1	INSPECT RADIO AND NAVIGATION ASSEMBLY

Wire Harness View:

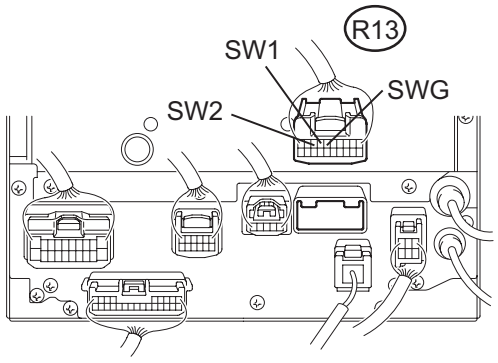

(a) Disconnect the radio and navigation assembly connector R13.

(b) Measure the resistance according to the value(s) in the table below.

Standard resistance

Tester connection	Condition	Specified condition
SW1 - SWG	No switch is pushed	Approx. 100 kΩ
SW1 - SWG	SEEK+ switch: push	Approx. 0 Ω
SW1 - SWG	SEEK- switch: push	Approx. 0.3 kΩ
SW1 - SWG	VOL+ switch: push	Approx. 1 kΩ
SW1 - SWG	VOL- switch: push	Approx. 3.2 kΩ
SW2 - SWG	No switch is pushed	Approx. 100 kΩ
SW2 - SWG	MODE switch: push	Approx. 0 Ω
SW2 - SWG	VOICE switch: push	Approx. 3.2 kΩ
SW2 - SWG	ON HOOK switch: push	Approx. 0.3 kΩ
SW2 - SWG	OFF HOOK switch: push	Approx. 1 kΩ

NG → Go to step 2

OK

PROCEED TO NEXT CIRCUIT INSPECTION SHOWN IN PROBLEM SYMPTOMS TABLE

NS

2	INSPECT STEERING PAD SWITCH ASSEMBLY

(a) Disconnect the steering pad switch assembly connector A.

Connector Front View:

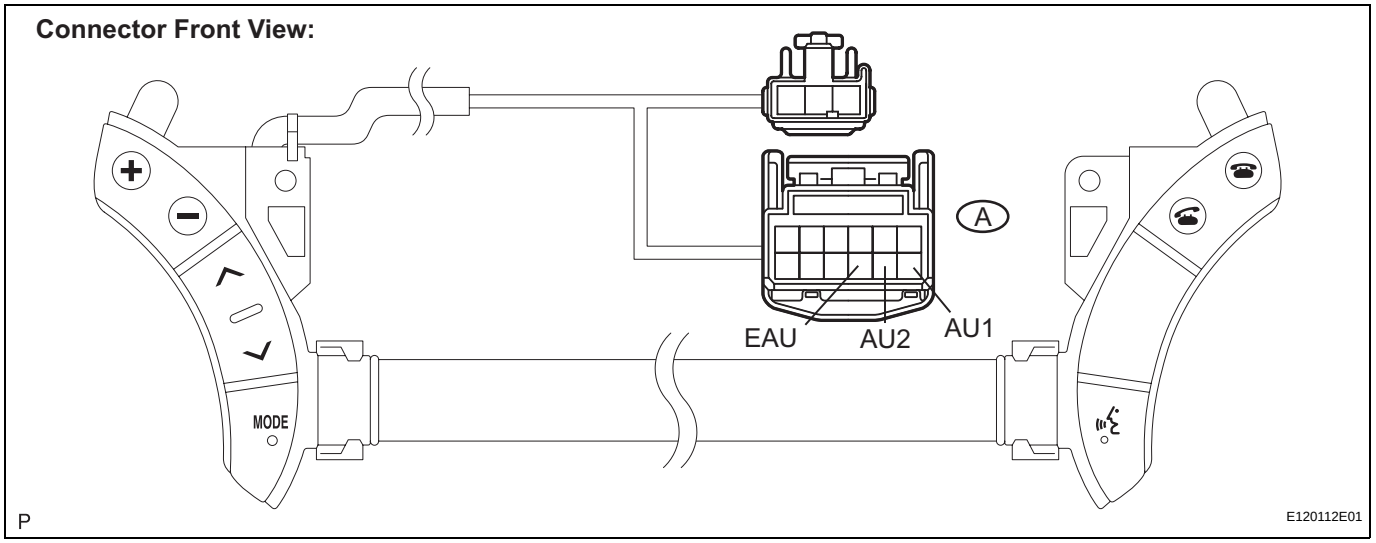

(b) Measure the resistance according to the value(s) in the table below.

Standard resistance

Tester connection	Condition	Specified condition
AU1 - EAU	No switch is pushed	Approx. 100 kΩ
AU1 - EAU	SEEK+ switch: push	Approx. 0 Ω
AU1 - EAU	SEEK- switch: push	Approx. 0.3 kΩ
AU1 - EAU	VOL+ switch: push	Approx. 1 kΩ
AU1 - EAU	VOL- switch: push	Approx. 3.2 kΩ
AU2 - EAU	No switch is pushed	Approx. 100 kΩ
AU2 - EAU	MODE switch: push	Approx. 0 Ω
AU2 - EAU	VOICE switch: push	Approx. 3.2 kΩ
AU2 - EAU	ON HOOK switch: push	Approx. 0.3 kΩ
AU2 - EAU	OFF HOOK switch: push	Approx. 1 kΩ

NG → **Go to step 4**

OK

3 INSPECT SPIRAL CABLE SUB-ASSEMBLY

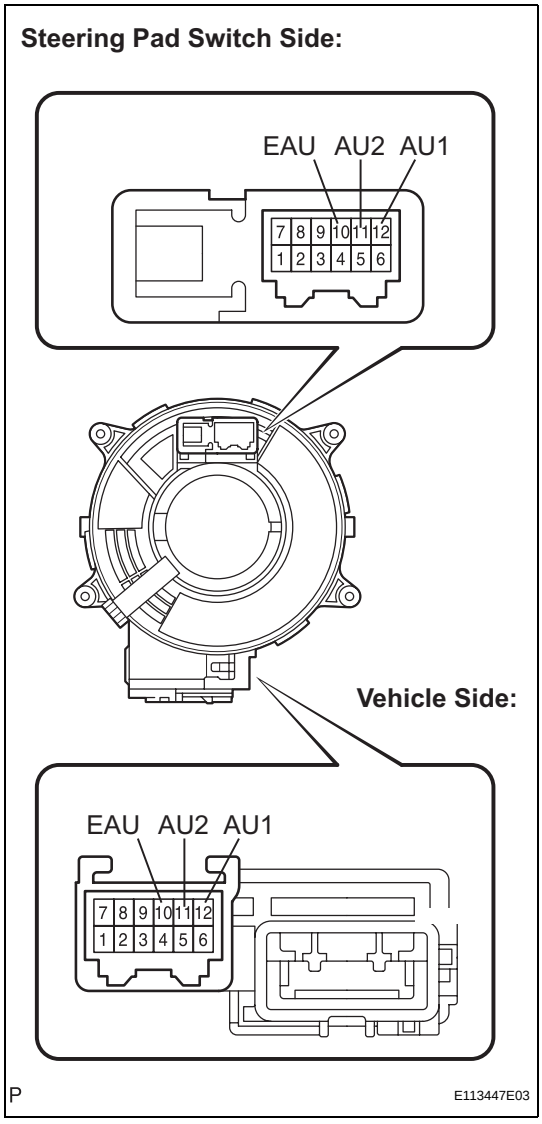

(a) Disconnect the steering pad switch assembly and spiral cable sub-assembly connectors.

(b) Measure the resistance according to the value(s) in the table below.

Standard resistance

Tester connection	Spiral Cable Position	Specified condition
EAU - EAU	Center	Below 1 Ω
	2.5 rotations to the left	
	2.5 rotations to the right	
AU1 - AU1	Center	Below 1 Ω
	2.5 rotations to the left	
	2.5 rotations to the right	
AU2 - AU2	Center	Below 1 Ω
	2.5 rotations to the left	
	2.5 rotations to the right	

NOTICE:
The spiral cable is an important part of the SRS airbag system. Incorrect removal or installation of the spiral cable may prevent the airbag from deploying. Be sure to read the page shown in the brackets (See page RS-434).

NG → **REPLACE SPIRAL CABLE SUB-ASSEMBLY**

OK

REPAIR OR REPLACE HARNESS OR CONNECTOR (SPIRAL CABLE SUB-ASSEMBLY - RADIO AND NAVIGATION ASSEMBLY)

4	INSPECT STEERING PAD SWITCH CABLE

(a) Disconnect the steering pad switch LH and the steering pad switch RH.

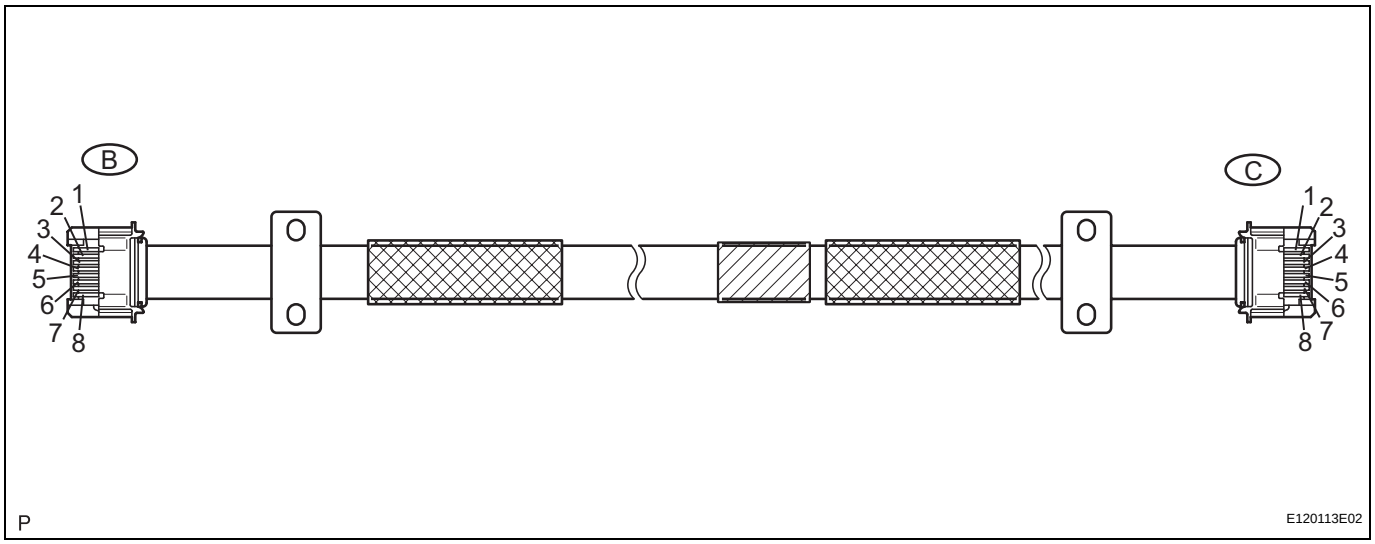

(b) Measure the resistance according to the value(s) in the table below.

NS

Standard resistance

Tester connection	Condition	Specified condition
B-1 - C-1	Always	Below 1 Ω
B-2 - C-2	Always	Below 1 Ω
B-3 - C-3	Always	Below 1 Ω
B-4 - C-4	Always	Below 1 Ω
B-5 - C-5	Always	Below 1 Ω
B-6 - C-6	Always	Below 1 Ω
B-7 - C-7	Always	Below 1 Ω
B-8 - C-8	Always	Below 1 Ω
B-1 - Body ground	Always	10 kΩ or higher
B-2 - Body ground	Always	10 kΩ or higher
B-3 - Body ground	Always	10 kΩ or higher
B-4 - Body ground	Always	10 kΩ or higher
B-5 - Body ground	Always	10 kΩ or higher
B-6 - Body ground	Always	10 kΩ or higher
B-7 - Body ground	Always	10 kΩ or higher
B-8 - Body ground	Always	10 kΩ or higher

NG → REPLACE STEERING PAD SWITCH CABLE

OK

5	INSPECT STEERING PAD SWITCH RH

(a) Reconnect the steering pad switch RH.

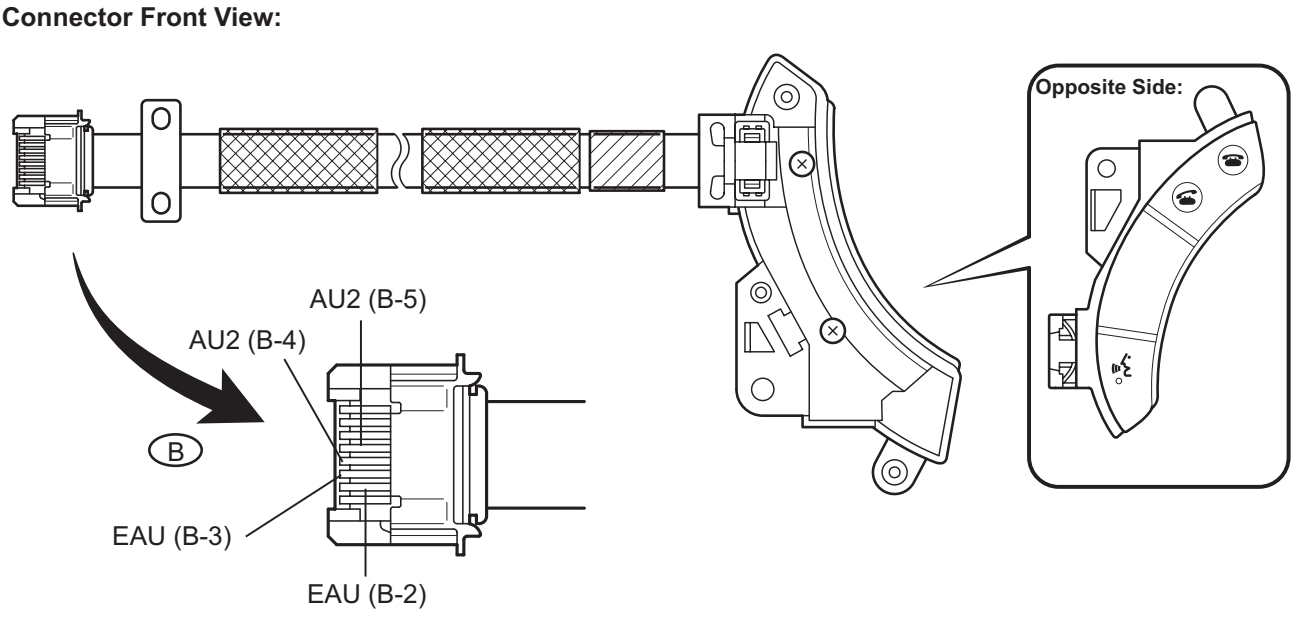

(b) Measure the resistance according to the value(s) in the table below.

NS **Standard resistance**

Tester connection	Condition	Specified condition
AU2 (B-4) - EAU (B-2)	No switch is pushed	10 kΩ or higher
AU2 (B-5) - EAU (B-3)		
AU2 (B-5) - EAU (B-2)		
AU2 (B-4) - EAU (B-3)		
AU2 (B-4) - EAU (B-2)	VOICE switch: push	Approx. 3.2 kΩ
AU2 (B-5) - EAU (B-3)		
AU2 (B-5) - EAU (B-2)		
AU2 (B-4) - EAU (B-3)		
AU2 (B-4) - EAU (B-2)	ON HOOK switch: push	Approx. 0.3 kΩ
AU2 (B-5) - EAU (B-3)		
AU2 (B-5) - EAU (B-2)		
AU2 (B-4) - EAU (B-3)		
AU2 (B-4) - EAU (B-2)	OFF HOOK switch: push	Approx. 1 kΩ
AU2 (B-5) - EAU (B-3)		
AU2 (B-5) - EAU (B-2)		
AU2 (B-4) - EAU (B-3)		

NG → **REPLACE STEERING PAD SWITCH RH**

OK

REPLACE STEERING PAD SWITCH LH