Illumination Circuit

DESCRIPTION

Power is supplied to the radio and navigation assembly and steering pad switch illumination when the light control switch is in the TAIL or HEAD position.

WIRING DIAGRAM

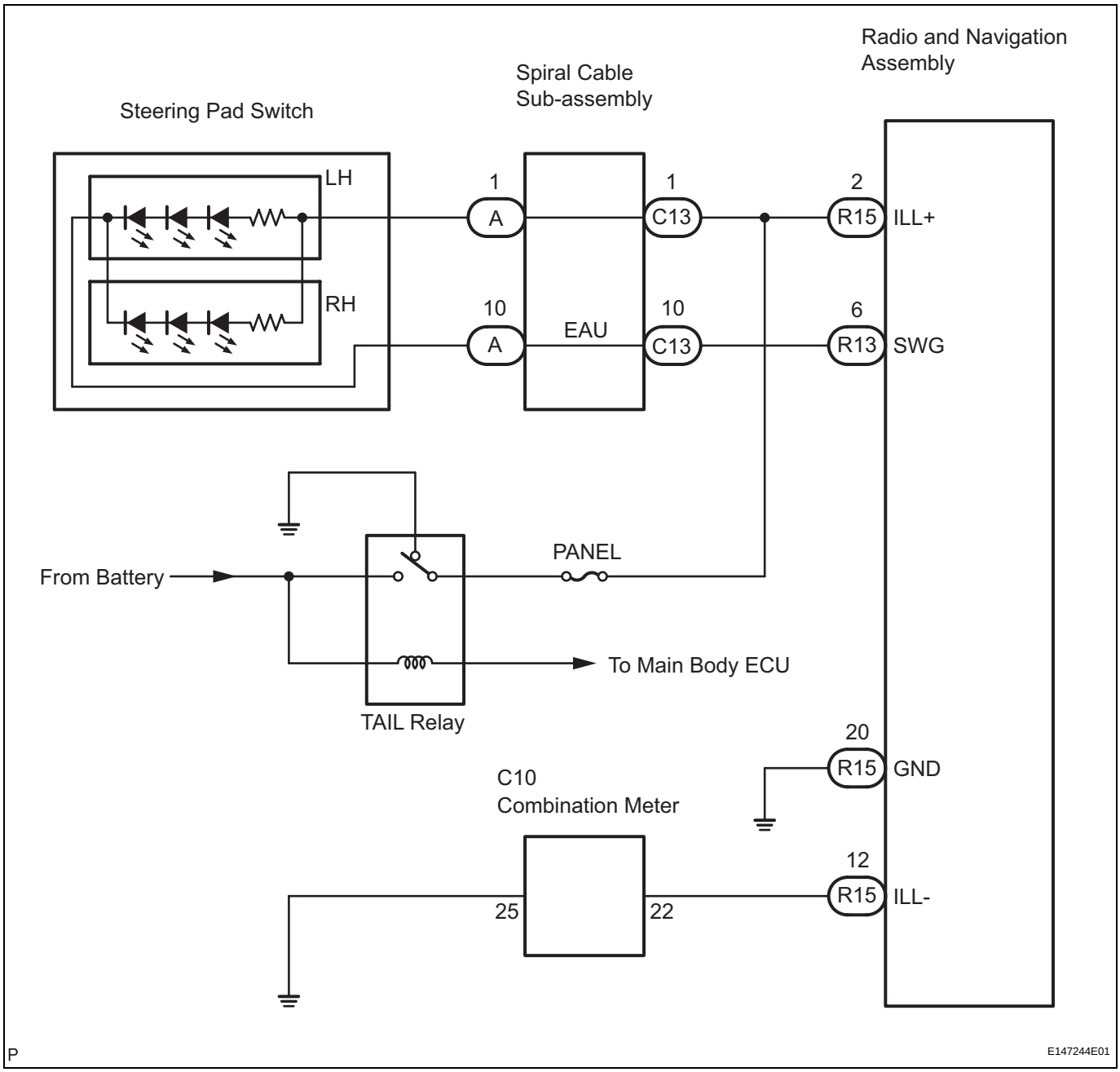

INSPECTION PROCEDURE

NOTICE:

The vehicle is equipped with an SRS (Supplemental Restraint System) such as the airbags. Before servicing (including removal or installation of parts), be sure to read the precautionary notice for the Supplemental Restraint System (See page RS-1).

1	CHECK ILLUMINATION

(a) Check if the illumination for the radio and navigation assembly, steering pad switch, glove box or others (Hazard switch, cigarette lighter, etc.) comes on when the light control switch is turned to the HEAD or TAIL position.

Result

Condition	Proceed to
Illumination comes on for all components except steering pad switch.	A
Illumination comes on for all components except radio and navigation assembly.	B
No illumination comes on (radio receiver, hazard switch, glove box, etc.)	C
Illumination comes on only for glove box and steering pad switch.	D

B → Go to step 7

C → GO TO LIGHTING SYSTEM

D → GO TO COMBINATION METER SYSTEM

A

2	CHECK HARNESS AND CONNECTOR (BATTERY - SPIRAL CABLE SUB-ASSEMBLY)

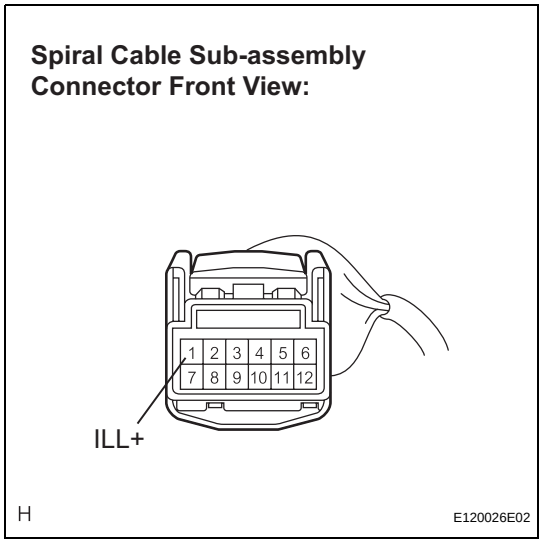

(a) Disconnect the spiral cable sub-assembly connector.
(b) Measure the voltage according to the value(s) in the table below.

Standard voltage

Tester connection	Condition	Specified condition
ILL+ - Body ground	Light control switch TAIL or HEAD	10 to 14 V

NG → REPAIR OR REPLACE HARNESS OR CONNECTOR

OK

3	CHECK STEERING PAD SWITCH ASSEMBLY

(a) Disconnect the steering pad switch assembly connector.

NS

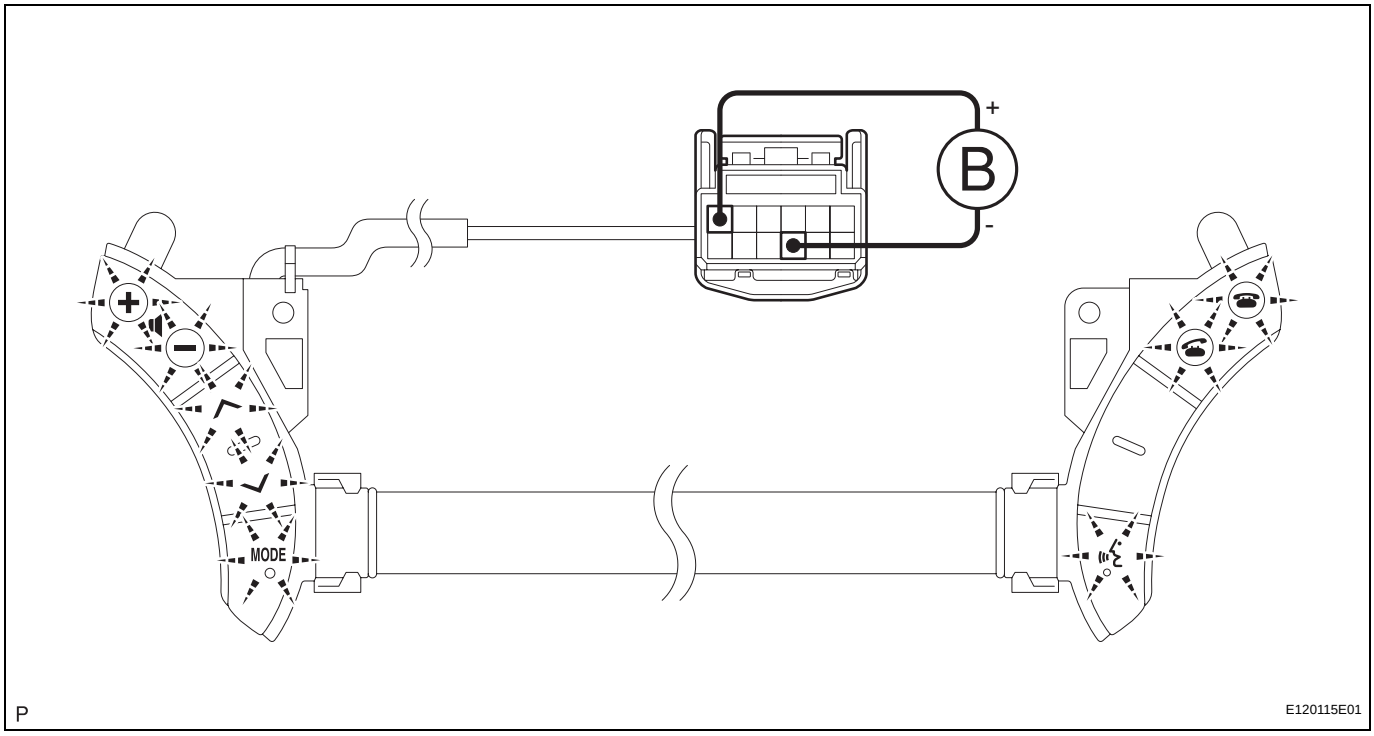

(b) Disconnect the steering pad switch connector.
(c) Connect the positive (+) lead to terminal ILL+ and the negative (-) lead to terminal EAU of the steering pad switch connector.
(d) Check if the illumination for the steering pad switch comes on.

NS

Result	Proceed to
Illumination does not come on for either the steering pad switch LH RH.	A
Illumination comes on for only the steering pad switch LH.	B
Illumination comes on for only the steering pad switch RH.	C

B → **Go to step 6**

C → **REPLACE STEERING PAD SWITCH LH**

A

4	INSPECT SPIRAL CABLE SUB-ASSEMBLY

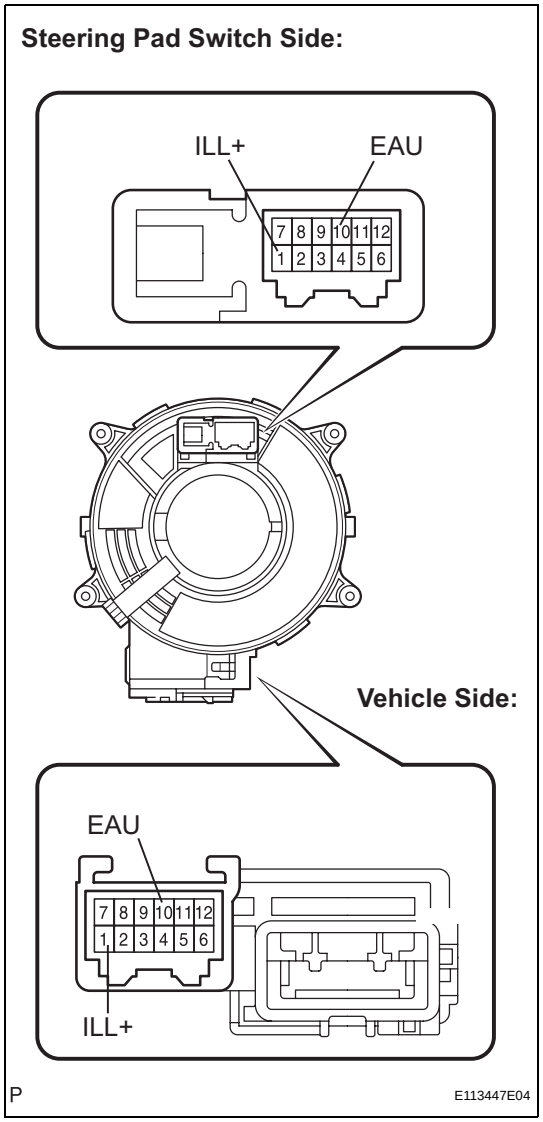

(a) Disconnect the steering pad switch and spiral cable sub-assembly connectors.

(b) Measure the resistance according to the value(s) in the table below.

Standard resistance

Tester Connection	Spiral Cable Position	Specified Condition
EAU - EAU	Center	Below 1 Ω
	2.5 rotations to the left	
	2.5 rotations to the right	
ILL+ - ILL+	Center	Below 1 Ω
	2.5 rotations to the left	
	2.5 rotations to the right	

NOTICE:
The spiral cable is an important part of the SRS airbag system. Incorrect removal or installation of the spiral cable may prevent the airbag from deploying. Be sure to read the page shown in the brackets (See page RS-434).

NG → REPLACE SPIRAL CABLE SUB-ASSEMBLY

OK

5	CHECK HARNESS AND CONNECTOR (SPIRAL CABLE SUB-ASSEMBLY - RADIO AND NAVIGATION ASSEMBLY)

Radio and Navigation Assembly Wire Harness View:

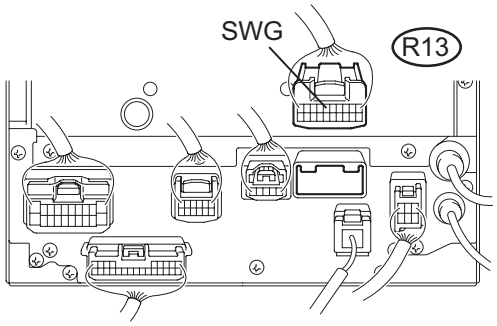

Spiral Cable Sub-assembly Connector Front View:

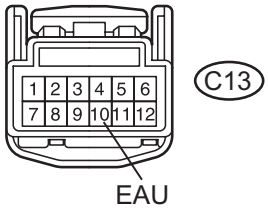

P E120116E01

(a) Disconnect the connectors from the radio and navigation assembly and spiral cable sub-assembly.
(b) Measure the resistance according to the value(s) in the table below.

Standard resistance

Tester connection	Condition	Specified condition
SWG - EAU	Always	Below 1 Ω
SWG - Body ground	Always	10 kΩ or higher

NG → **REPAIR OR REPLACE HARNESS OR CONNECTOR**

OK

REPLACE RADIO AND NAVIGATION ASSEMBLY

6	INSPECT STEERING PAD SWITCH CABLE

(a) Disconnect the steering pad switch LH and the steering pad switch RH.

NS

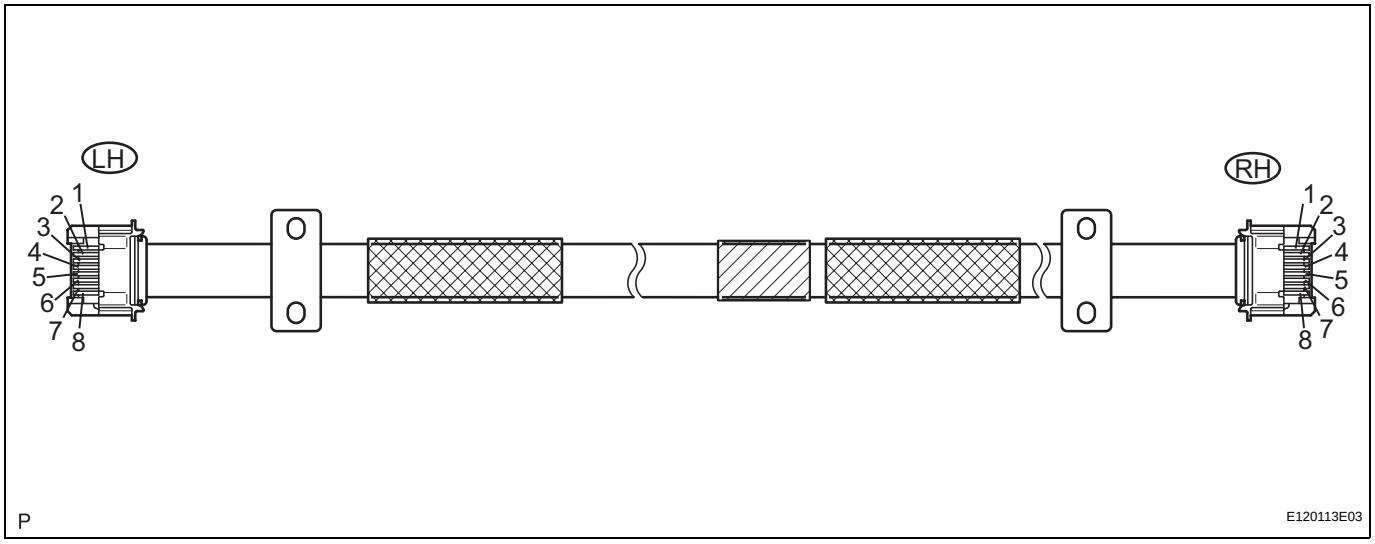

(b) Measure the resistance according to the value(s) in the table below.

Standard resistance

Tester connection	Condition	Specified condition
LH-1 - RH-1	Always	Below 1 Ω
LH-2 - RH-2	Always	Below 1 Ω
LH-3 - RH-3	Always	Below 1 Ω
LH-4 - RH-4	Always	Below 1 Ω
LH-5 - RH-5	Always	Below 1 Ω
LH-6 - RH-6	Always	Below 1 Ω
LH-7 - RH-7	Always	Below 1 Ω
LH-8 - RH-8	Always	Below 1 Ω
LH-1 - Body ground	Always	10 kΩ or higher
LH-2 - Body ground	Always	10 kΩ or higher
LH-3 - Body ground	Always	10 kΩ or higher
LH-4 - Body ground	Always	10 kΩ or higher
LH-5 - Body ground	Always	10 kΩ or higher
LH-6 - Body ground	Always	10 kΩ or higher
LH-7 - Body ground	Always	10 kΩ or higher
LH-8 - Body ground	Always	10 kΩ or higher

NG → **REPLACE STEERING PAD SWITCH CABLE**

OK

REPLACE STEERING PAD SWITCH RH

7	CHECK HARNESS AND CONNECTOR (BATTERY - RADIO AND NAVIGATION ASSEMBLY)

Wire Harness View:

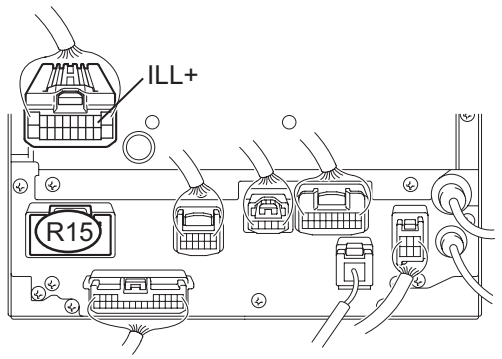

(a) Disconnect the radio and navigation assembly connector R15.
(b) Measure the voltage according to the value(s) in the table below.

Standard voltage

Tester connection	Condition	Specified condition
ILL+ - Body ground	Light control switch TAIL or HEAD	10 to 14 V

NG → **REPAIR OR REPLACE HARNESS OR CONNECTOR**

OK

8	CHECK HARNESS AND CONNECTOR (RADIO AND NAVIGATION ASSEMBLY - COMBINATION METER)

Wire Harness View:

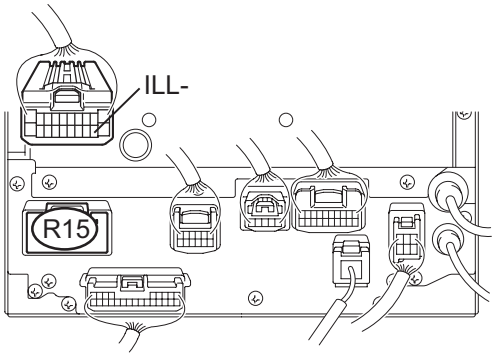

Combination Meter Wire Harness View:

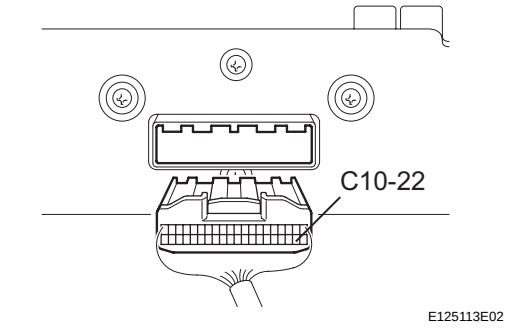

(a) Disconnect the radio and navigation assembly and combination meter connectors.
(b) Measure the resistance according to the value(s) in the table below.

Standard voltage

Tester connection	Condition	Specified condition
ILL- - C10-22	Always	Below 1 Ω
ILL- - Body ground	Always	10 kΩ or higher

NG → **REPAIR OR REPLACE HARNESS OR CONNECTOR**

NS

OK

PROCEED TO NEXT CIRCUIT INSPECTION SHOWN IN PROBLEM SYMPTOMS TABLE