Sound Signal Circuit between Radio and Navigation Assembly and Television Display Assembly

DESCRIPTION

The television display assembly sends an RSE sound signal to the radio and navigation assembly through this circuit. The sound signal that has been sent is amplified by the stereo component amplifier, and then is sent to the speakers.
If there is an open or short in the circuit, sound cannot be heard from the speakers even if there is no malfunction in the stereo component amplifier, radio and navigation assembly or speakers.

WIRING DIAGRAM

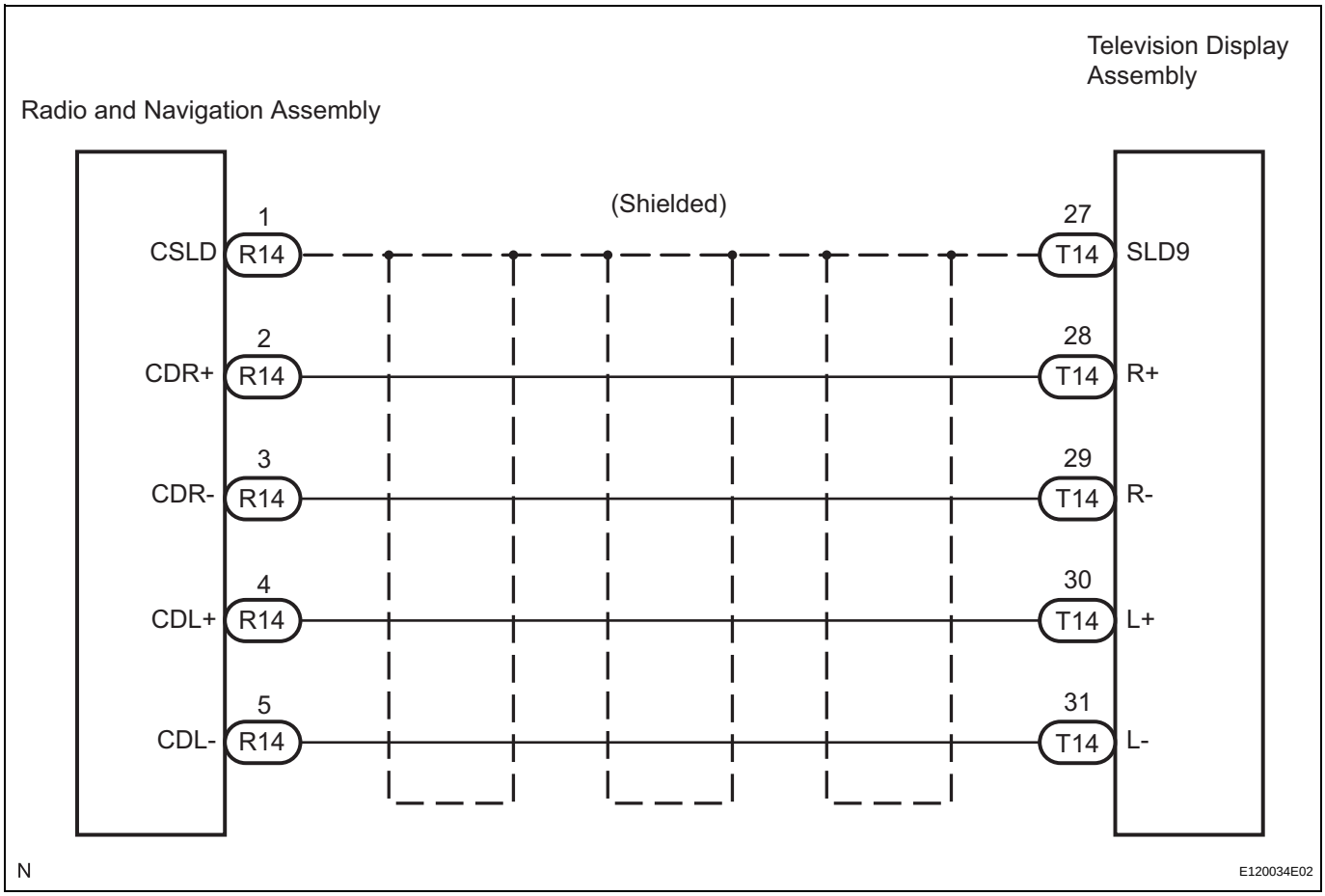

INSPECTION PROCEDURE

1	CHECK HARNESS AND CONNECTOR (RADIO AND NAVIGATION ASSEMBLY - TELEVISION DISPLAY ASSEMBLY)

Radio and Navigation Assembly Wire Harness View:

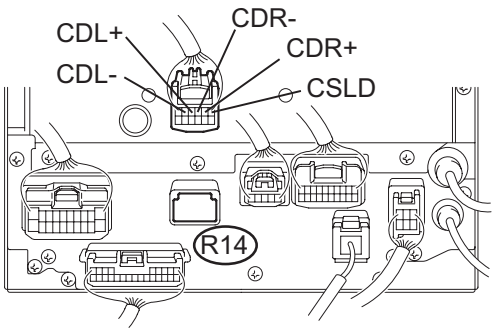

Television Display Assembly Wire Harness View:

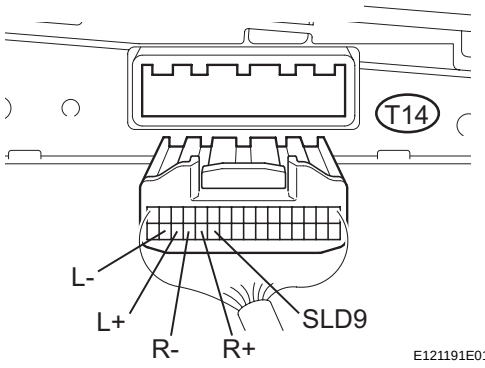

(a) Disconnect the connectors from the television display assembly and radio and navigation assembly.
(b) Measure the resistance according to the value(s) in the table below.

Standard resistance

Tester connection	Condition	Specified condition
CDR+ - R+	Always	Below 1 Ω
CDR- - R-	Always	Below 1 Ω
CDL+ - L+	Always	Below 1 Ω
CDL- - L-	Always	Below 1 Ω
CSLD - SLD9	Always	Below 1 Ω
R- - Body ground	Always	10 kΩ or higher
L+ - Body ground	Always	10 kΩ or higher
L- - Body ground	Always	10 kΩ or higher
R+ - Body ground	Always	10 kΩ or higher
SLD9 - Body ground	Always	10 kΩ or higher

NG → **REPAIR OR REPLACE HARNESS OR CONNECTOR**

OK

2	INSPECT TELEVISION DISPLAY ASSEMBLY

Wire Harness View:

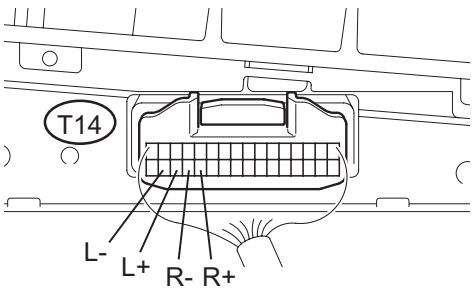

(a) Reconnect the television display assembly connector and radio and navigation assembly connectors.
(b) Check the waveform according to the conditions in the table below.

NS

Standard resistance

Tester connection	Condition	Specified condition
R+ - Body ground	Voice sound is being produced	A waveform synchronized with sound is output
R- - Body ground	Voice sound is being produced	A waveform synchronized with sound is output
L+ - Body ground	Voice sound is being produced	A waveform synchronized with sound is output
L- - Body ground	Voice sound is being produced	A waveform synchronized with sound is output

NG → **REPLACE TELEVISION DISPLAY ASSEMBLY**

OK

PROCEED TO NEXT CIRCUIT INSPECTION SHOWN IN PROBLEM SYMPTOMS TABLE