Radio and Navigation Assembly Communication Error

INSPECTION PROCEDURE

1 IDENTIFY THE COMPONENT SHOWN BY THE SUB-CODE

Example:

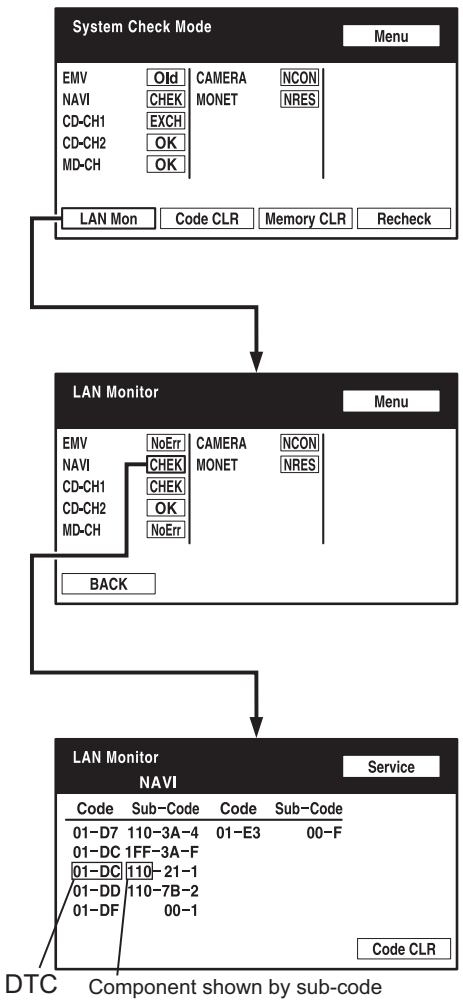

(a) Enter the diagnostic mode.
(b) Press the "LAN Mon" switch to change to "LAN Monitor" mode.
(c) Identify the component shown by the sub-code.
HINT:
- "110 (multi-display)" is the component shown by the sub-code in the example shown in the illustration.
- The sub-code will be indicated by its physical address.
- For the component list, refer to "DIAGNOSIS DISPLAY DETAILED DESCRIPTION" (See page NS-30).

NEXT

2 CHECK POWER SOURCE CIRCUIT OF COMPONENT SHOWN BY SUB-CODE

(a) Inspect the power source circuit of the component shown by the sub-code.
If the power source circuit is operating normally, proceed to the next step.

Component Table:

Component	Proceed to
Television display assembly (1B0)	Television display assembly power source circuit (See page NS-229)
Stereo component amplifier (440)	Stereo component amplifier power source circuit (See page NS-225)

NS

NEXT

3	CHECK RADIO AND NAVIGATION ASSEMBLY

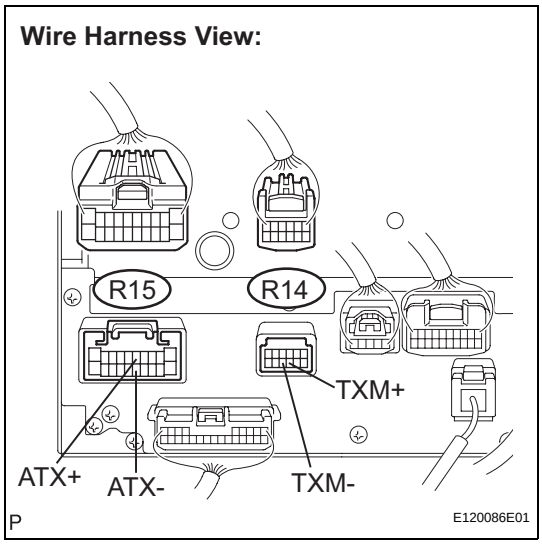

(a) Disconnect the radio and navigation assembly.
(b) Measure the resistance according to the value(s) in the table below.

Standard resistance

Tester Connection	Condition	Specified Condition
ATX+ (R15-5) - ATX- (R15-15)	Always	60 to 80 Ω
TX+ (R14-9) - TX- (R14-10)	Always	60 to 80 Ω

NG → REPLACE RADIO AND NAVIGATION ASSEMBLY

OK

4	CHECK HARNESS AND CONNECTOR

NS

HINT:
- Start the check from the circuit that is near the component shown by the sub-code first.
- For details of the connectors, refer to "TERMINALS OF ECU" (See page NS-45).

(a) Referring to the AVC-LAN wiring diagram below, check the AVC-LAN circuit between the radio and navigation assembly and the component shown by the sub-code.
  (1) Disconnect all connectors between the radio and navigation assembly and the component shown by sub-code.
  (2) Check for an open or short in the AVC-LAN circuit between the radio and navigation assembly and the component shown by the sub-code.

AVC-LAN WARNING DIAGRAM

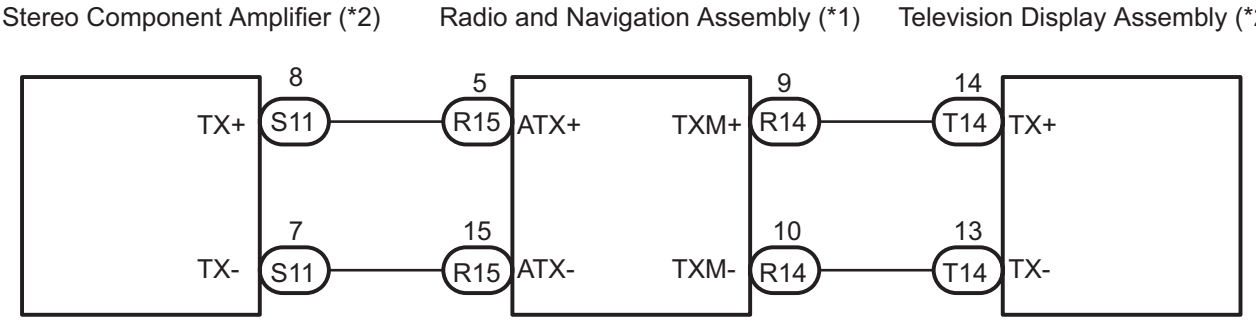

*1: Master Unit

*2: Slave Unit

P

E120087E01

OK:

There is no open or short circuit.

NG	**REPAIR OR REPLACE HARNESS OR CONNECTOR**

OK

NS

5	**REPLACE COMPONENT SHOWN BY SUB-CODE**

(a) Replace the component shown by the sub-code with a normal one and check if the same problem occurs again.

OK:

Same problem does not occur.

NG	**REPLACE RADIO AND NAVIGATION ASSEMBLY**

OK

END