Television Display Power Source Circuit

DESCRIPTION

This is the power source circuit to operate the television display assembly.

WIRING DIAGRAM

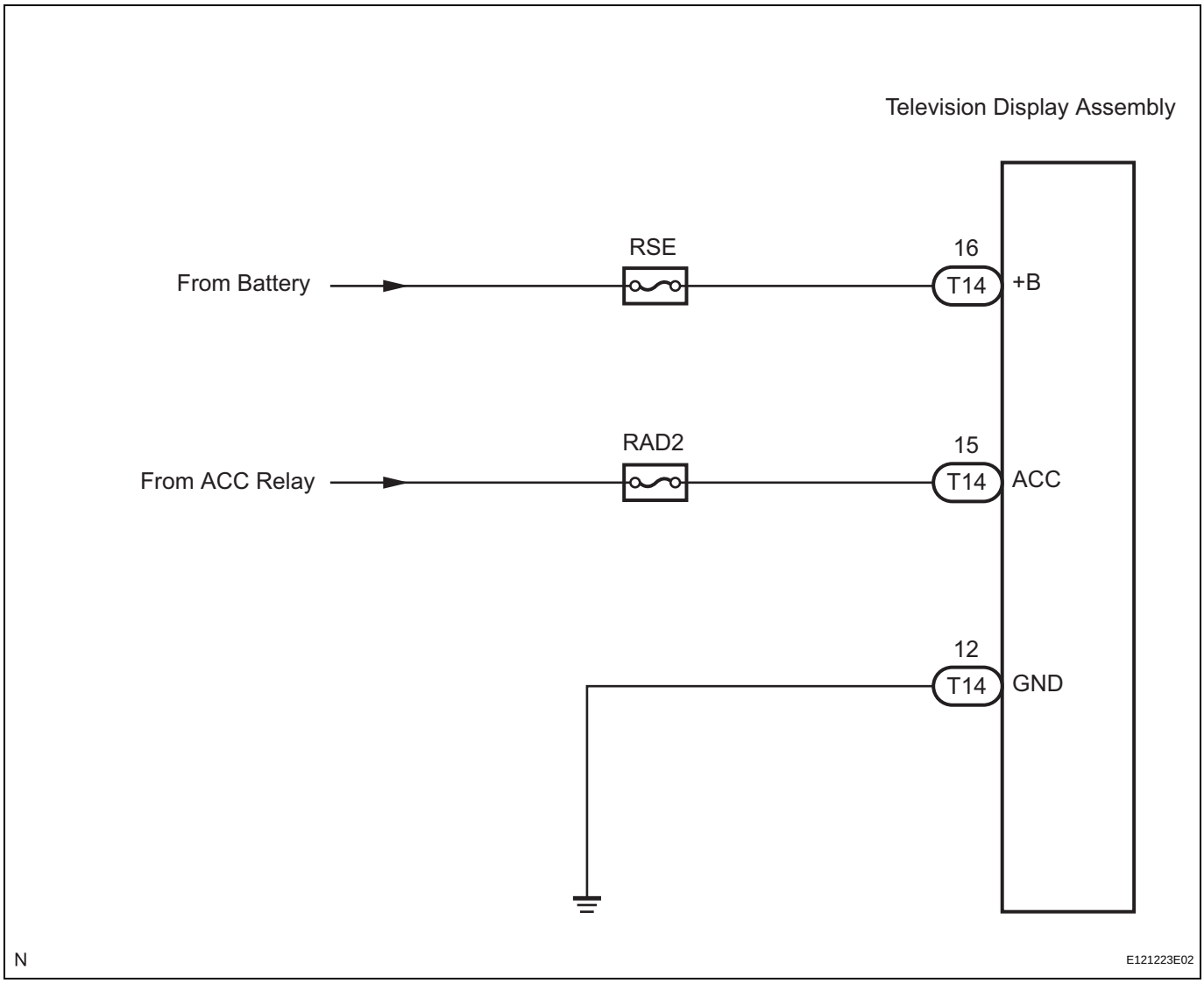

INSPECTION PROCEDURE

1	INSPECT TELEVISION DISPLAY ASSEMBLY

Wire Harness View:

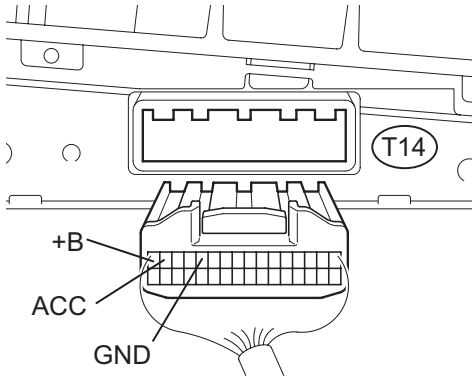

(a) Disconnect the connector from the television display assembly.

(b) Measure the resistance according to the value(s) in the table below.

Standard resistance

Tester connection	Condition	Specified condition
GND - Body ground	Always	Below 1 Ω

(c) Measure the voltage according to the value(s) in the table below.

Standard voltage

Tester connection	Condition	Specified condition
+B - GND	Always	10 to 14 V
ACC - GND	Ignition SW ACC	10 to 14 V

NG → **REPAIR OR REPLACE HARNESS OR CONNECTOR**

OK

PROCEED TO NEXT CIRCUIT INSPECTION SHOWN IN PROBLEM SYMPTOMS TABLE