DTC	01-DF	Master Error

DESCRIPTION

DTC No.	DTC Detection Condition	Trouble Area
01-DF *1	• The device with a display fails and the master is switched to the audio device. • A communication error between sub-master (radio receiver) and master occurs.	• Radio and navigation assembly power source circuit • AVC-LAN circuit between the radio and navigation assembly and the component which has stored this code • AVC-LAN circuit between the radio and navigation assembly and the radio receiver • Radio and navigation assembly • Component which has stored this code

HINT:
*1: When 210 seconds have elapsed after disconnecting the power supply connector of the master component with the ignition switch in the ACC or ON position, this code is stored.

NOTICE:

- **Before starting troubleshooting, be sure to clear DTCs to erase codes stored due to the reasons described in the HINT above. Then, check for DTCs and troubleshoot according to the output DTCs.**
- **The radio and navigation assembly is the master unit.**
- **Be sure to clear and recheck DTCs after the inspection is completed to confirm that no DTCs are output.**

INSPECTION PROCEDURE

NOTICE:
Be sure to read DESCRIPTION before performing the following procedures.

NS

1	CHECK RADIO AND NAVIGATION ASSEMBLY POWER SOURCE CIRCUIT

Refer to the radio and navigation assembly power source circuit (See page NS-227).
If the power source circuit is operating normally, proceed to the next step.

NEXT

2	INSPECT RADIO AND NAVIGATION ASSEMBLY

Wire Harness View:

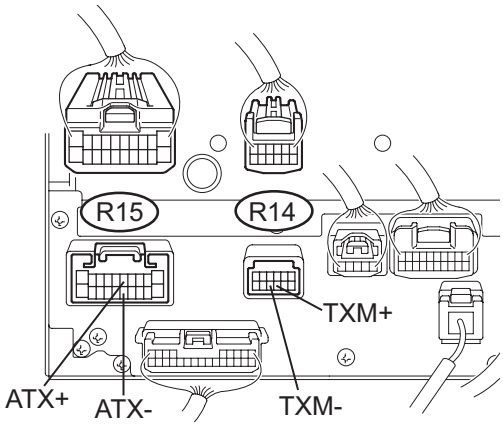

(a) Disconnect the radio and navigation assembly connectors.
(b) Measure the resistance according to the value(s) in the table below.

Standard resistance

Tester Connection	Condition	Specified Condition
ATX+ (R15-5) - ATX- (R15-15)	Always	60 to 80 Ω
TX+ (R14-9) - TX- (R14-10)	Always	60 to 80 Ω

NG → **REPLACE RADIO AND NAVIGATION ASSEMBLY**

OK

NS

3 IDENTIFY THE COMPONENT WHICH HAS STORED THIS CODE

Example:

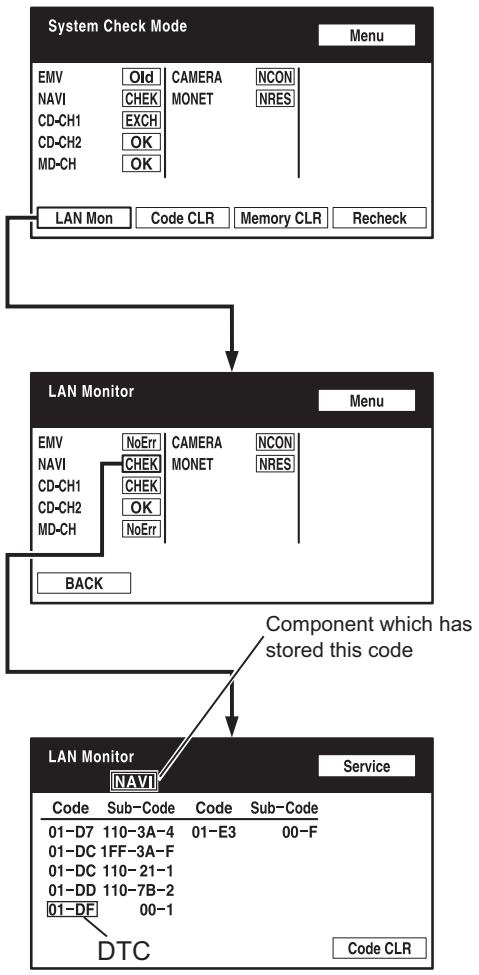

P E121199E04

(a) Enter the diagnostic mode.
(b) Press the "LAN Mon" switch to change to "LAN Monitor" mode.
(c) Identify the component which has stored this code.

Component Table:

Display	Component
Rr-TV	Television display assembly
DSP-AMP	Stereo component amplifier

HINT:
"NAVI" is the component which has stored this code in the example shown in the illustration.

NEXT

4 CHECK HARNESS AND CONNECTOR

HINT:
For details of the connectors, refer to "TERMINALS OF ECU" (See page NS-45).

(a) Referring to the AVC-LAN wiring diagram below, check the AVC-LAN circuit between the radio and navigation assembly and the component which has stored this code.
  (1) Disconnect all connectors between the radio and navigation assembly and the component which has stored this code.
  (2) Check for an open or short in the AVC-LAN circuit between the radio and navigation assembly and the component which has stored this code.

NS

OK:
There is no open or short circuit.

AVC-LAN WARNING DIAGRAM

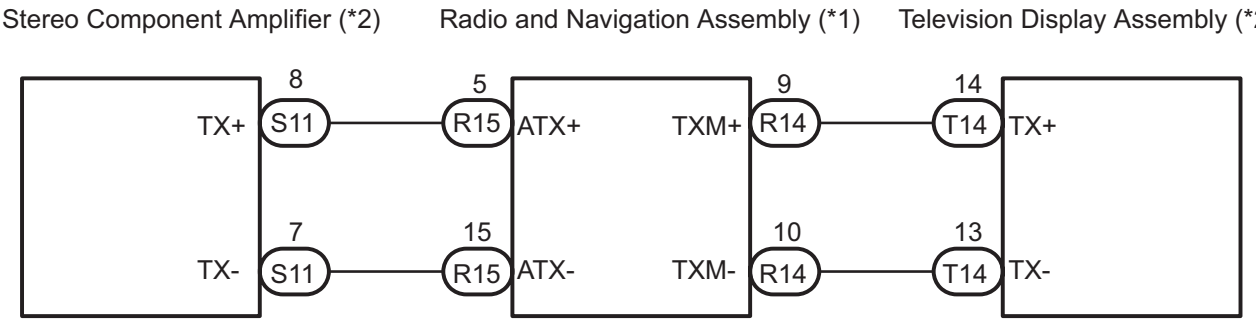

*1: Master Unit

*2: Slave Unit

P

E120087E01

NG → **REPAIR OR REPLACE HARNESS OR CONNECTOR**

OK

NS

5	**REPLACE RADIO AND NAVIGATION ASSEMBLY**

(a) Replace the radio and navigation assembly with a normal one and check if the same problem occurs again.
OK:
Same problem does not occur.

NG → **REPLACE COMPONENT WHICH HAS STORED THIS CODE**

OK

END