Display Panel does not Open, Tilt or Tilts Improperly

INSPECTION PROCEDURE

1	CHECK RADIO AND NAVIGATION ASSEMBLY

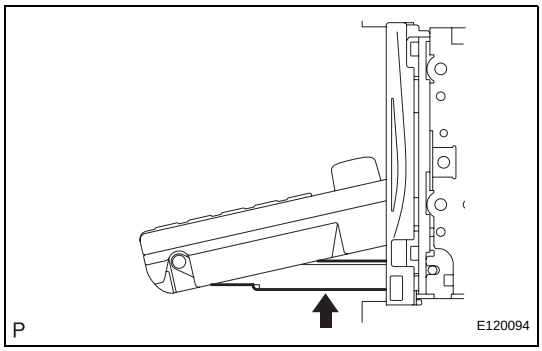

(a) Check for foreign matter or obstructions caught in the moving parts of the panel.
OK:
No obstruction or foreign matter found.

NG → **REMOVE ANY OBSTRUCTION OR FOREIGN MATTER FOUND**

OK

2	CHECK OPERATION

(a) Check if the navigation and audio systems function properly.
OK:
Navigation and audio systems function properly.

OK → **REPLACE RADIO AND NAVIGATION ASSEMBLY**

NG

PROCEED TO NEXT CIRCUIT INSPECTION SHOWN IN PROBLEM SYMPTOMS TABLE

Screen Flicker or Color Distortion

INSPECTION PROCEDURE

1 CHECK DISPLAY SETTING

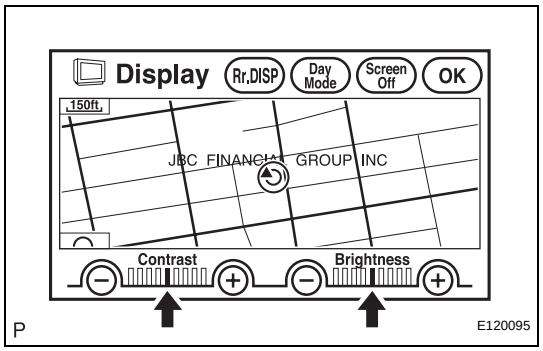

(a) Enter the display adjustment screen by pressing the "DISPLAY" switch.

(b) Reset display settings (contrast, brightness) and check that the screen appears normal.

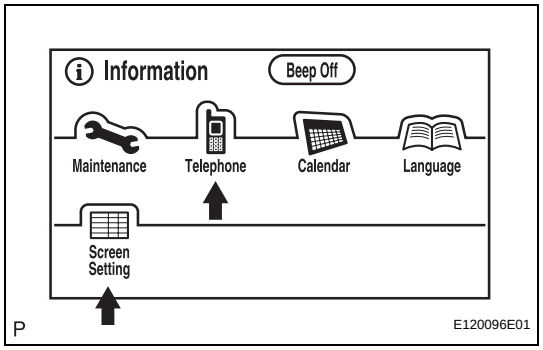

(c) Press the "INFO" switch and then select "Screen Setting."

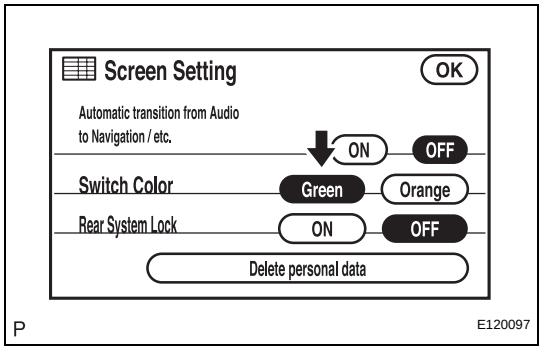

(d) Set the "Switch Color" to "Green" (initial setting) and check if the display returns to normal.

OK:

Returns to normal.

NG → **Go to step 2**

OK

END

2 CHECK CABIN

(a) Check that the cabin temperature is warmer than -20°C (-4.0°F).

OK:

Cabin is warmer than -20°C (-4.0°F).

NG → **HEAT CABIN AND RECHECK TEMPERATURE**

NS

OK

3	CHECK COLOR BAR (DISPLAY CHECK MODE)

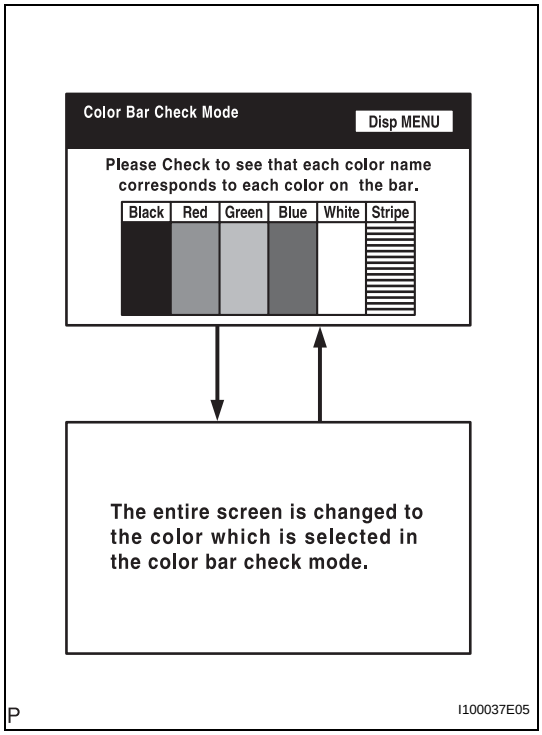

(a) Enter the "Display Check" mode (Color Bar Check) (See page NS-22).
(b) Check that the color bars match the displayed names.
OK:
Color bars match the displayed names.

NG → **REPLACE RADIO AND NAVIGATION ASSEMBLY**

OK

NS

4	CHECK NAVI COLOR BAR (NAVIGATION CHECK MODE)

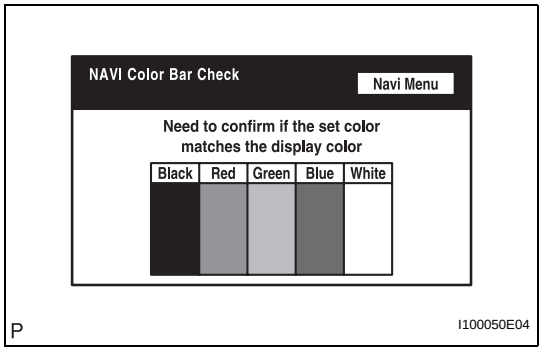

(a) Enter the "Navigation Check" mode (NAVI Color Bar Check) (See page NS-27).
(b) Check that the color bars match the displayed names.
OK:
Color bars match the displayed names.

NG → **REPLACE RADIO AND NAVIGATION ASSEMBLY**

OK

PROCEED TO NEXT CIRCUIT INSPECTION SHOWN IN PROBLEM SYMPTOMS TABLE