OPERATION CHECK

1. DETECTION RANGE MEASUREMENT AND INDICATOR CHECK

(a) Turn the IG switch ON.

(b) Move the shift lever to the R position (when the back sonar and rear clearance sonar is checked).

(c) With front clearance sonar:
Move the shift lever to the N position (when the front clearance sonar is checked).
NOTICE:
Apply the parking brake securely so that the vehicle does not move.

(d) Turn the clearance sonar main switch ON.

(e) Move a ϕ 60 mm (2.36 in.) pole around the sensor to measure the detection range of the sensor.

Back Sonar Detection Range:

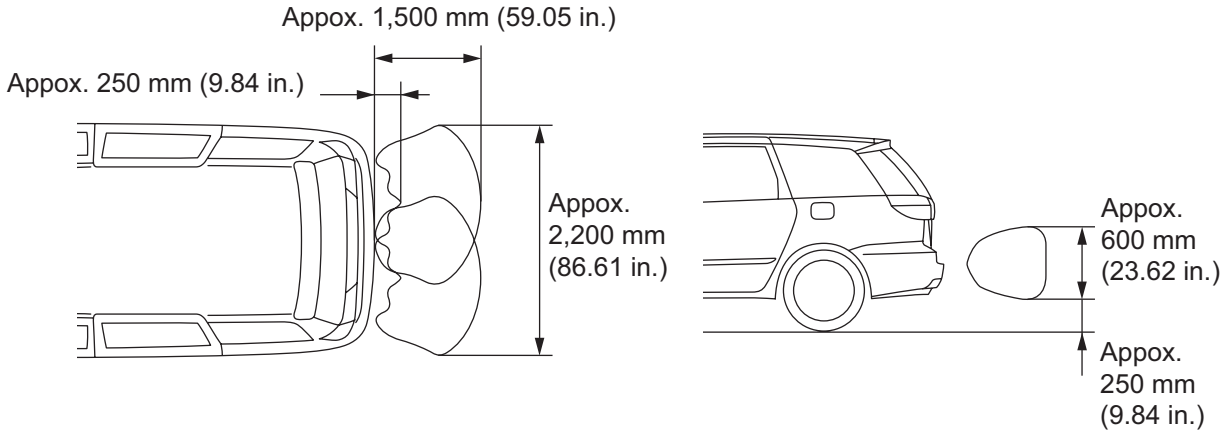

PM

Clearance Sonar Detection Range:

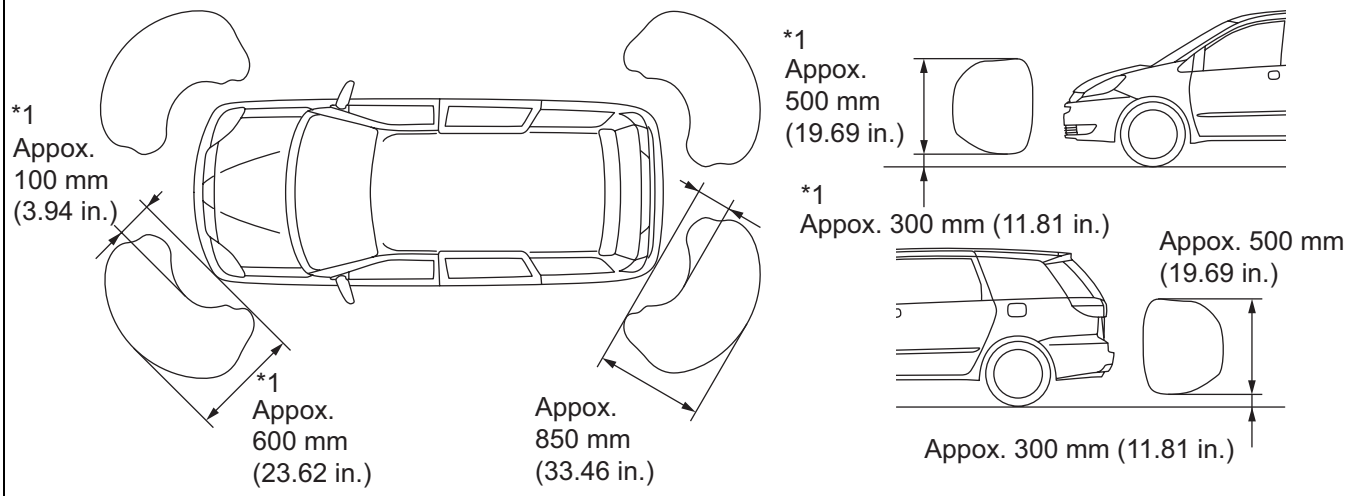

*1: with Front Clearance Sonar

H

E124024E01

NOTICE:
The measured detection range is for the ϕ60 mm (2.36 in.) pole. The detection range for walls and other obstacle is different.

(f) Check the indicator and the buzzer sounding condition when the back sonar sensor detects an obstacle.

Back Sonar Indicator:

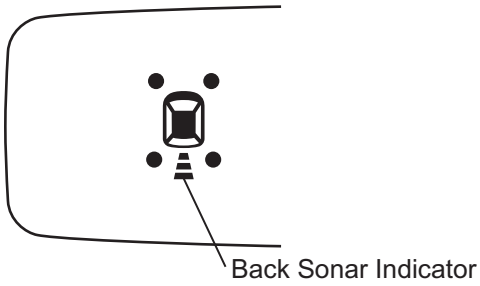

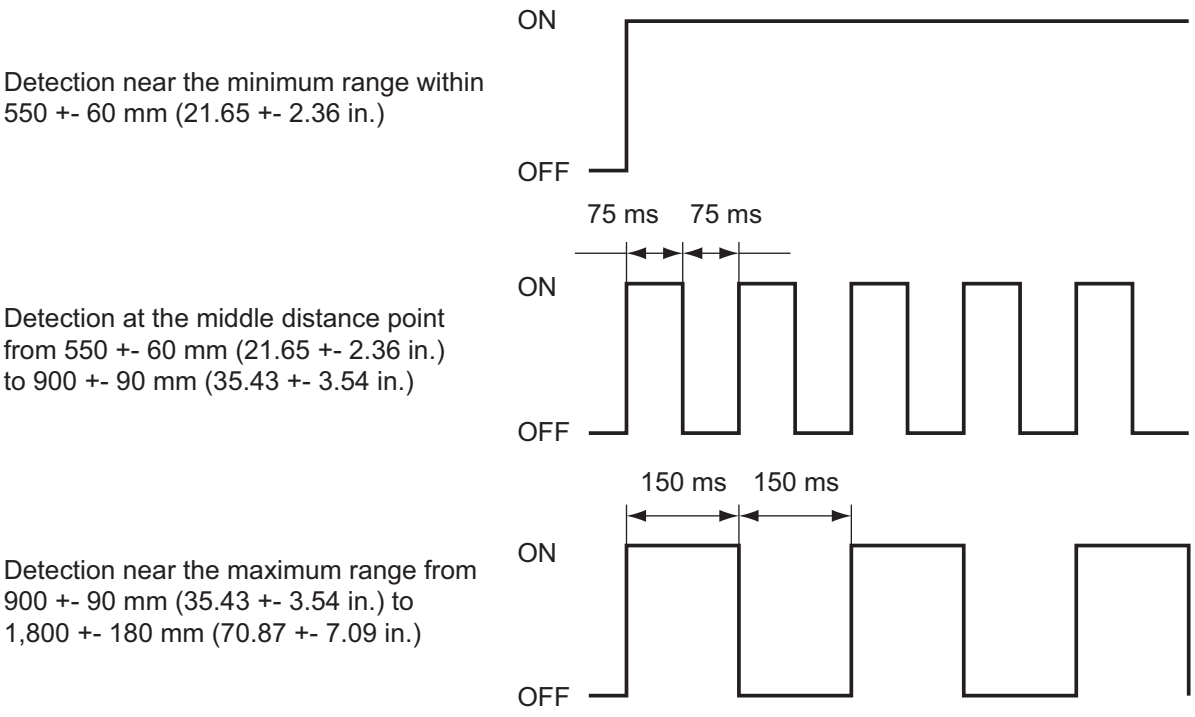

H

E124025E01

Operation condition

Ignition switch	Clearance sonar main switch	Shift position
ON	ON	R position

HINT:
Since sound waves are used for the detection range measurement, the detection range may vary a little due to the outside air temperature.

PM

(g) Check the indicator and the buzzer sounding condition when the rear clearance sonar sensor detects an obstacle.

Rear Clearance Sonar Indicator:

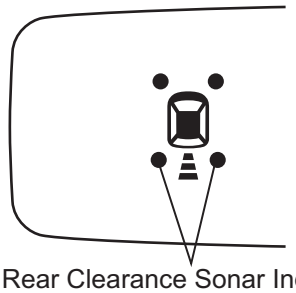

Rear Clearance Sonar Indicator

Detection near the minimum range within 250 +- 30 mm (9.84 +- 1.18 in.)

Detection at the middle distance point from 250 +- 30 mm (9.84 +- 1.18 in.) to 520 +- 60 mm (20.47 +- 2.36 in.)

Detection near the maximum range from 520 +- 60 mm (20.47 +- 2.36 in.) to 850 +- 90 mm (33.46 +- 3.54 in.)

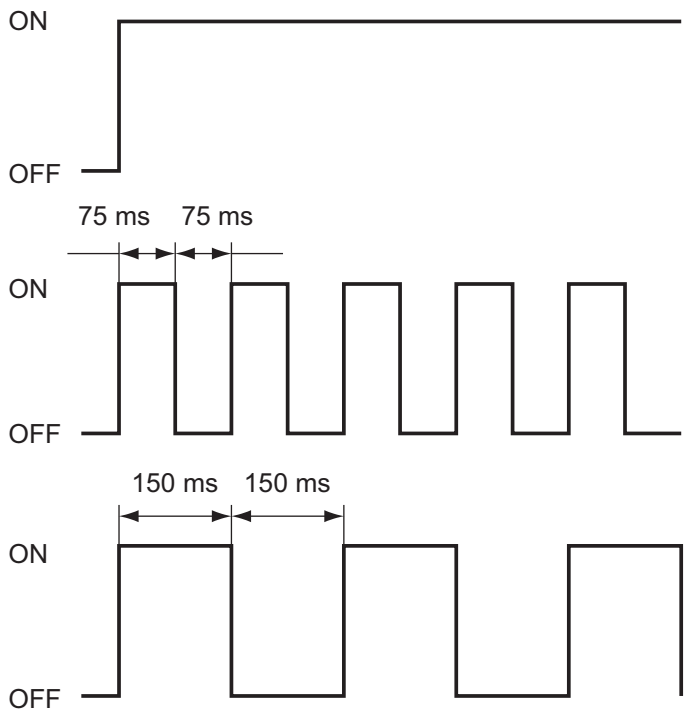

H

E124025E02

Operation condition

Ignition switch	Clearance sonar main switch	Shift position
ON	ON	R position

HINT:
Since sound waves are used for the detection range measurement, the detection range may vary a little due to the outside air temperature.

(h) With front clearance sonar:
Check the indicator and the buzzer sounding condition when the front clearance sonar sensor detects an obstacle.

Front Clearance Sonar Indicator (with Front Clearance Sonar):

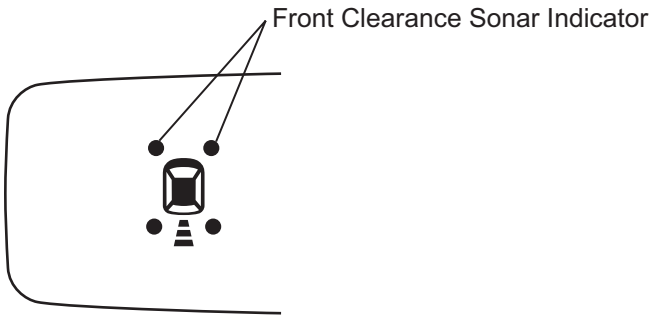

Detection near the minimum range within 250 +- 30 mm (9.84 +- 1.18 in.)



Detection at the middle distance point from 250 +- 30 mm (9.84 +- 1.18 in.) to 400 +- 40 mm (15.75 +- 1.57 in.)

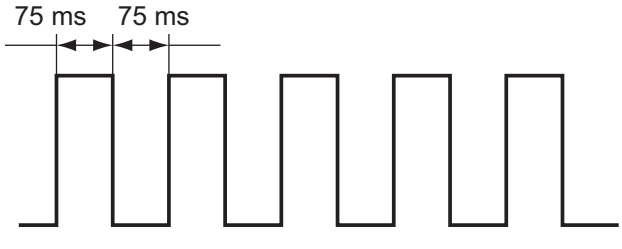

Detection near the maximum range from 400 +- 40 mm (15.75 +- 1.57 in.) to 600 +- 60 mm (23.62 +- 2.36 in.)

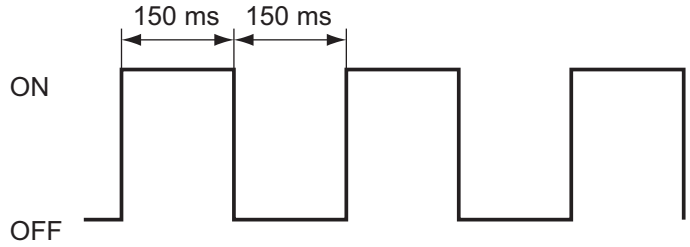

H

E124025E03

Operation condition

Ignition switch	Clearance sonar main switch	Shift position	Vehicle speed
ON	ON	Except P position	10 km/h (6 mph) or less

HINT:
Since sound waves are used for the detection range measurement, the detection ranges may vary a little due to the outside air temperature.

PM

Initial Check for LED and Buzzer:

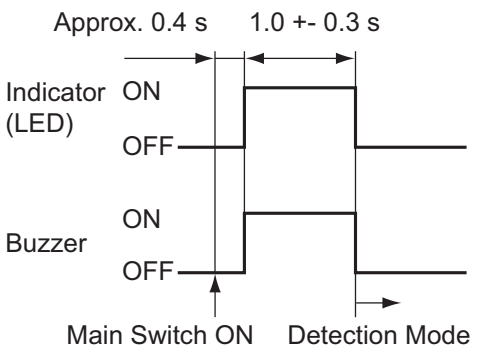

2. CHECK INITIAL CHECK FUNCTION

(a) Check the initial check function for the LED and buzzer.

Turn the ignition switch and clearance main switch ON. The LED are buzzer will operate for about 1 second +- 0.3 seconds, regardless of shift lever position or vehicle speed. The system will then begin normal detection operation.

If the LED or buzzer is faulty, the relevant LED and buzzer operate as shown in the illustration below.

Fault Display:

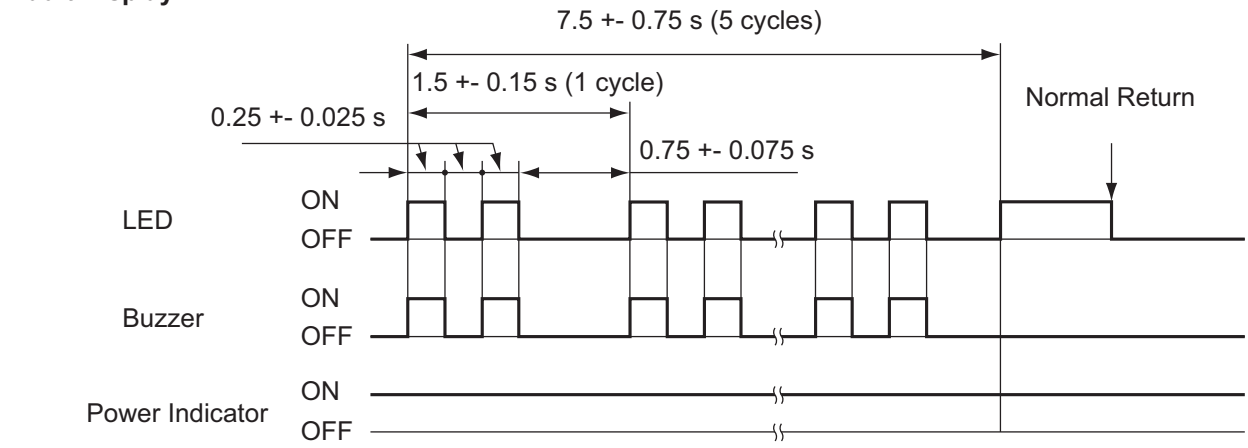

HINT:

- If each LED, power indicator and buzzer are not turned on continuously when power is turned on, the wire is broken.
- After the system returns to be normal, it conducts normal operation.

Initial Check for Sensor:

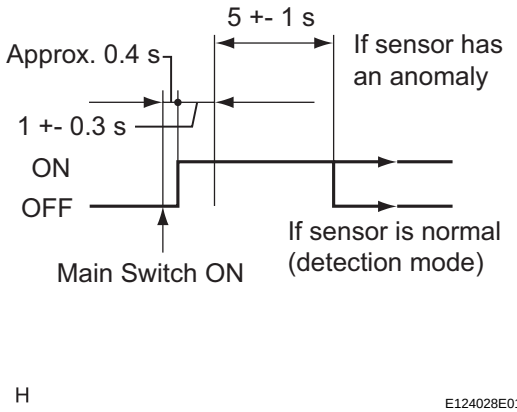

(b) Check the initial check function for the sensor.

For vehicles with 4 sensors:

- Approximately 0.4 seconds after the ignition switch has been turned to the ON position, and the clearance sonar main switch has been turned on, all sensors will be checked by the system.
- The sensor check operation will continue for 5 seconds +/- 1 second. Even if one or more sensors are anomalous, the sensor check operation will be halted after 5 seconds +/- 1 second have elapsed.

For vehicles with 6 sensors:

- Approximately 0.4 seconds after the ignition switch has been turned to the ON position, and the clearance sonar main switch has been turned on, all sensors will be checked by the system.

PM

- After 1 second +/- 0.3 seconds have elapsed, the check operation for all of the sensors will stop when a vehicle speed of over 10 km/h is detected.
- When the vehicle has been shifted from the P position, the system will change to obstacle detecting operation according to the shift position.
- If there are no changes in the conditions, such as those listed above (speed or shifter position), the sensor check operation will be halted after 5 seconds +/- 1 second have elapsed. If one or more sensors are anomalous, check operation for all of the sensors will continue (sensors will continue transmitting).

If the sensor is found to have an anomaly due to an open circuit or freezing for approximately 5 seconds or more, indications as shown in the following illustration appear.

Fault Display:

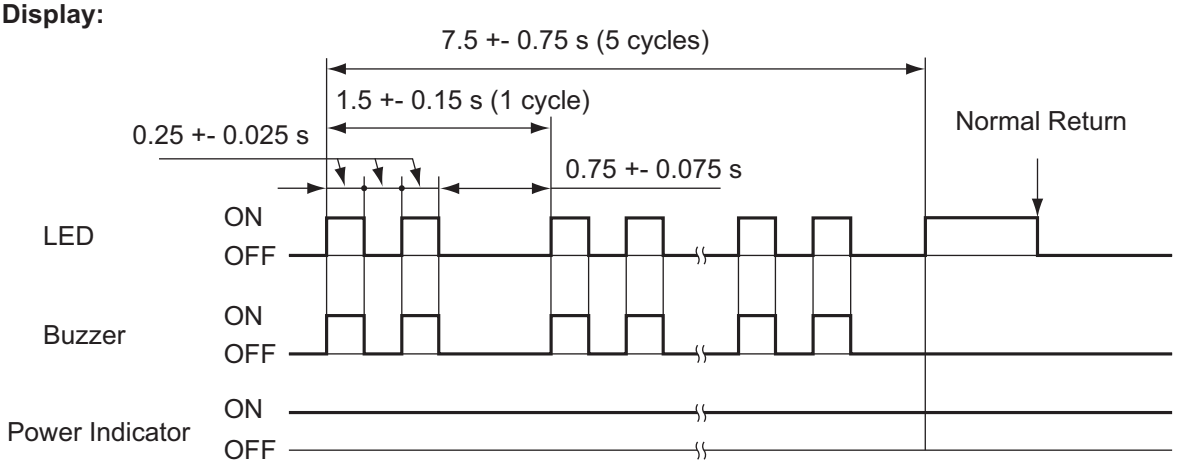

Freeze Display:

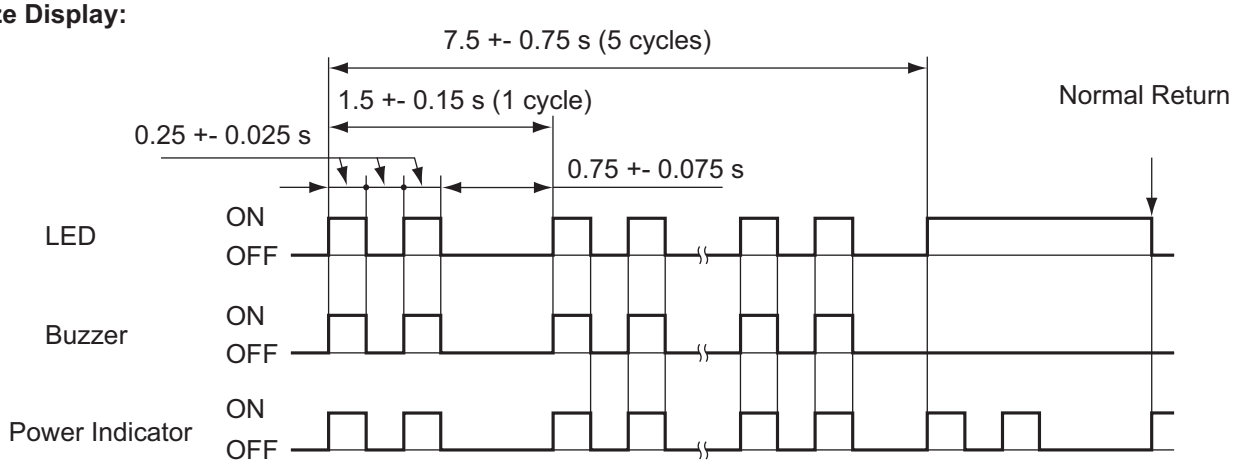

H

E124029E01

PM

HINT:

- After the system returns to normal, it conducts normal operation.
- If one of the back sonar sensors is faulty, the other sensors will not be used to detect obstacles.