Front Clearance Sonar Sensor RH Circuit

DESCRIPTION

An ultrasonic sensor consists of a sensor portion that transmits and receives ultrasonic waves and a pre-amplifier that amplifies them. The ultrasonic sensor outputs the ultrasonic waves and sends the reveiced signals to the clearance warning ECU.

WIRING DIAGRAM

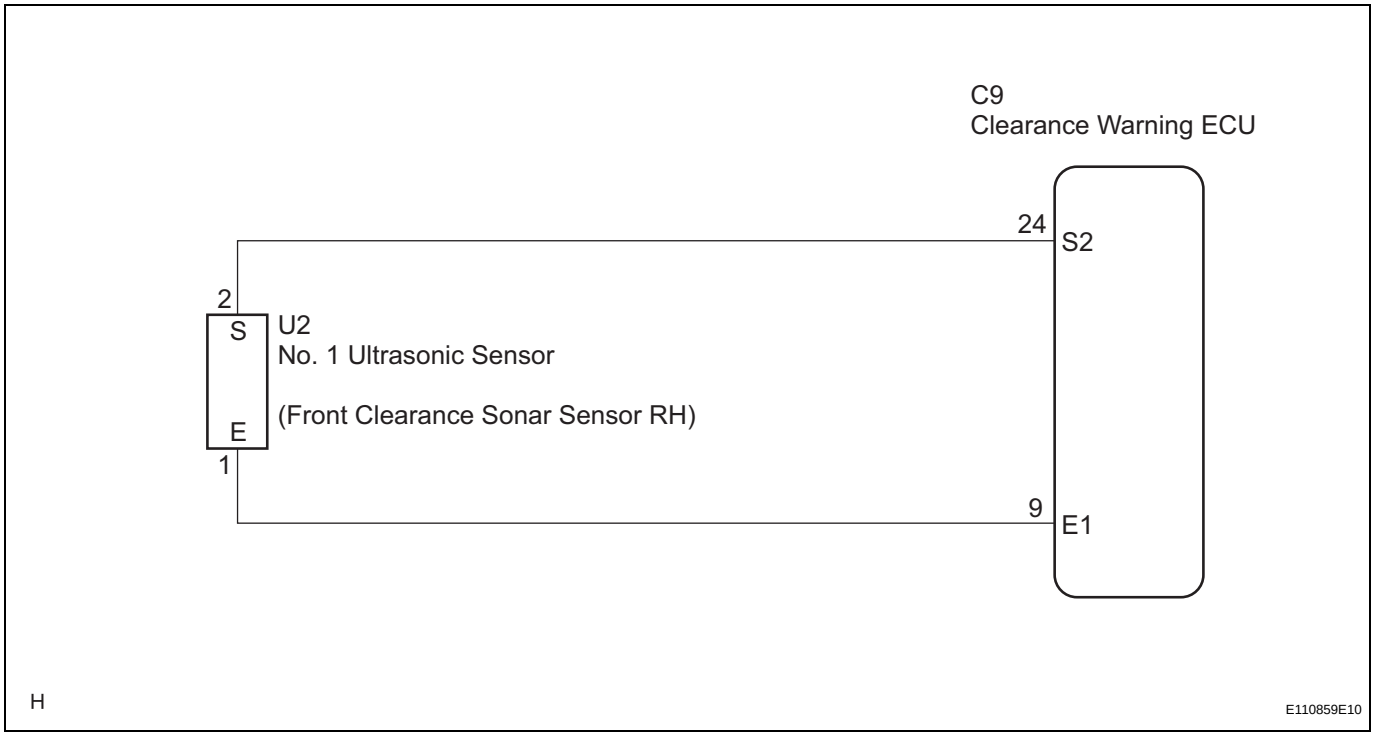

PM

INSPECTION PROCEDURE

1	INSPECT NO. 1 ULTRASONIC SENSOR

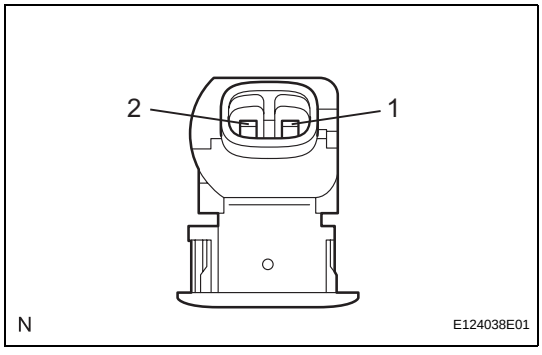

(a) Remove the No. 1 ultrasonic sensor.
(b) Measure the resistance according to the value(s) in the table below.

Standard resistance

Tester connection	Condition	Specified condition
1 - 2	Always	8 to 12 kΩ

NG → **REPLACE NO. 1 ULTRASONIC SENSOR**

OK

2	CHECK HARNESS AND CONNECTOR (CLEARANCE WARNING ECU - NO. 1 ULTRASONIC SENSOR)

Clearance Warning ECU Wire Harness View:

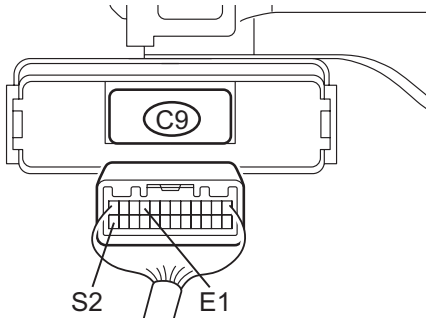

N E124033E07

(a) Disconnect the C9 connector from the clearance warning ECU.

No. 1 Ultrasonic Sensor Connector Front View:

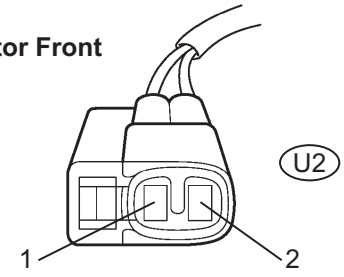

I041776E10

(b) Disconnect the U2 connector from the No. 1 ultrasonic sensor.

(c) Measure the resistance according to the value(s) in the table below.

Standard resistance

Tester connection	Condition	Specified condition
S2 - S	Always	Below 1 Ω
E1 - E	Always	Below 1 Ω
S2 - Body ground	Always	10 kΩ or higher
E1 - Body ground	Always	10 kΩ or higher

PM

NG → **REPAIR OR REPLACE HARNESS OR CONNECTOR**

OK

PROCEED TO NEXT CIRCUIT INSPECTION SHOWN IN PROBLEM SYMPTOMS TABLE