Indicator Circuit

DESCRIPTION

The indicator displays the location of the obstacle and the approximate distance between the vehicle and the obstacle either by blinking or turning on.

WIRING DIAGRAM

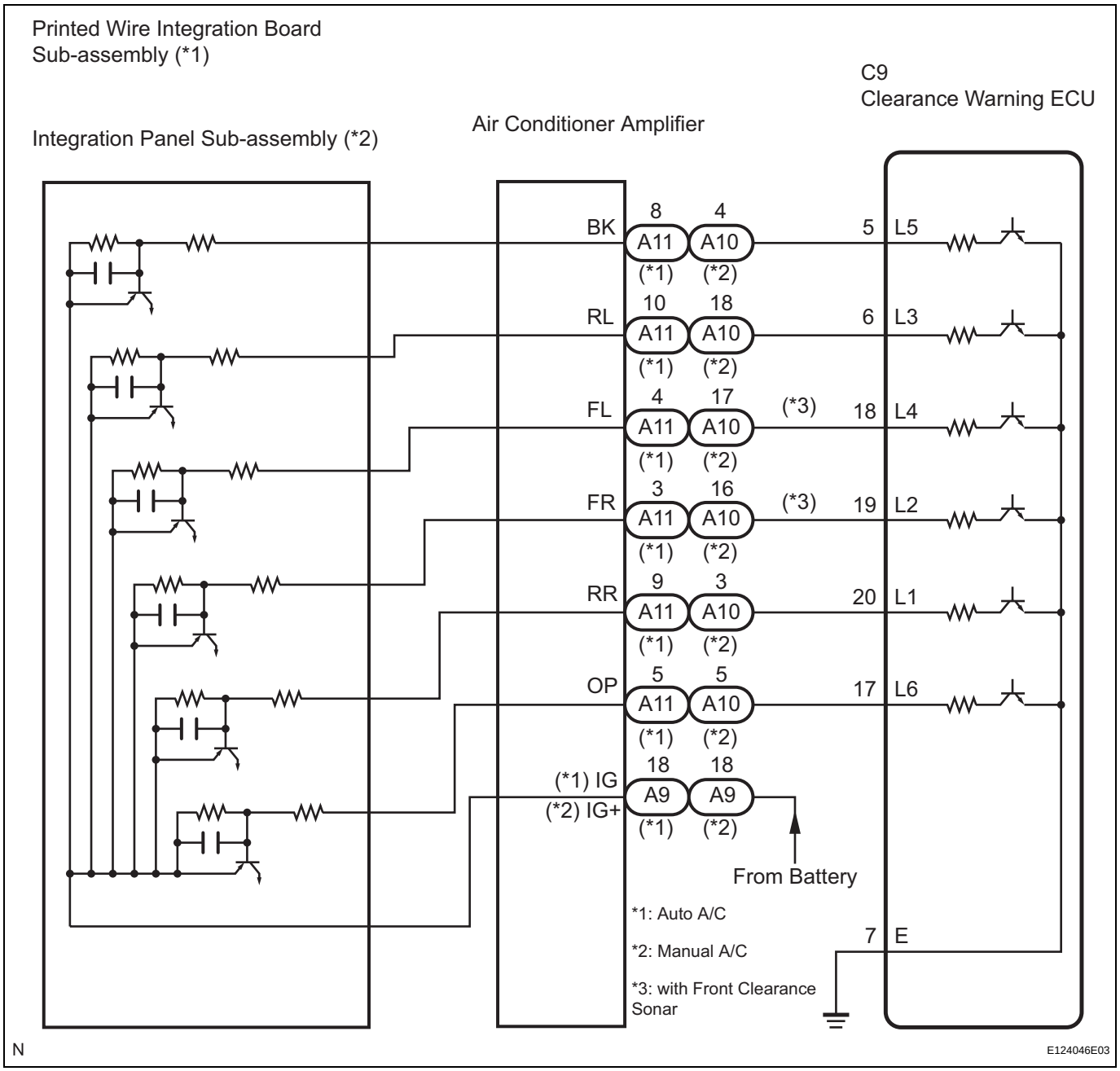

PM

INSPECTION PROCEDURE

1	CHECK HARNESS AND CONNECTOR (CLEARANCE WARNING ECU - AIR CONDITIONER AMPLIFIER)

Clearance Warning ECU Wire Harness View:

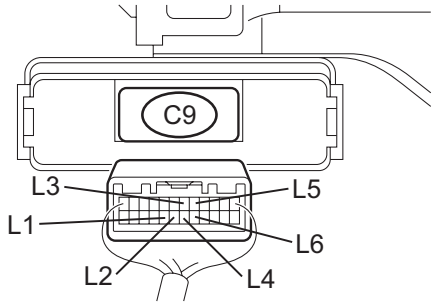

Air Conditioner Amplifier (Auto A/C) Wire Harness View:

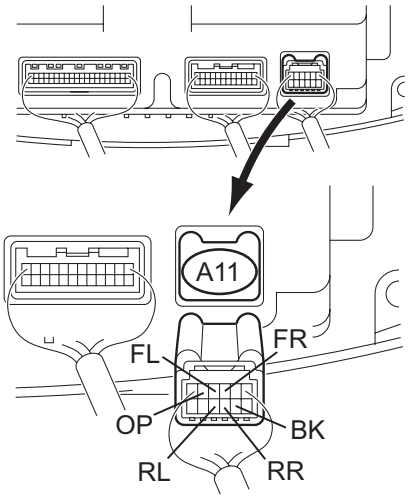

Air Conditioner Amplifier (Manual A/C) Wire Harness View:

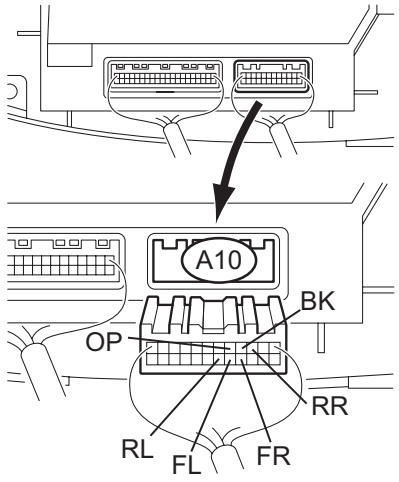

H

E145205E06

(a) Disconnect the connectors from the clearance warning ECU C9 and air conditioner amplifier connector A10 or A11.

(b) Measure the resistance according to the value(s) in the table below.

Standard resistance

Tester connection	Condition	Specified condition
BK - L5	Always	Below 1 Ω
RL - L3	Always	Below 1 Ω
FL - L4	Always	Below 1 Ω
FR - L2	Always	Below 1 Ω
RR - L1	Always	Below 1 Ω
OP - L6	Always	Below 1 Ω
BK - Body ground	Always	10 kΩ or higher
RL - Body ground	Always	10 kΩ or higher
FL - Body ground	Always	10 kΩ or higher
FR - Body ground	Always	10 kΩ or higher
RR - Body ground	Always	10 kΩ or higher
OP - Body ground	Always	10 kΩ or higher

NG → **REPAIR OR REPLACE HARNESS OR CONNECTOR**

PM

OK

2 INSPECT INDICATOR

Wire Harness View (Auto A/C) :

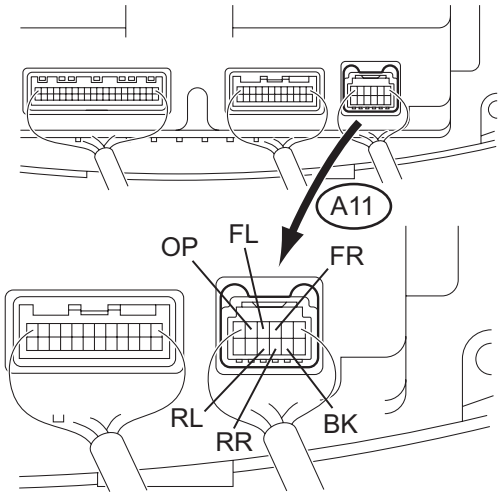

Wire Harness View (Manual A/C) :

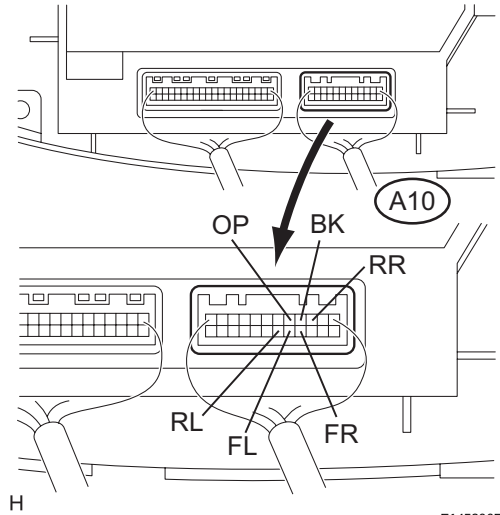

E145206E04

(a) Remove the integration control & panel assembly with the connectors being connected.
(b) Using a service wire, ground each terminal of the integration control & panel assembly connector.
(c) Turn the ignition switch ON.
(d) Check that each LED comes on.

Indicators that come on	The terminals to which the service wire connects
Power indicator	OP
Back sonar	BK
Clearance sonar front RH	FR
Clearance sonar front LH	FL
Clearance sonar rear RH	RR
Clearance sonar rear LH	RL

Result

Result	Proceed to
OK	A
NG	B (Auto A/C)
NG	C (Manual A/C)

B → Go to step 3

C → Go to step 4

A

PROCEED TO NEXT CIRCUIT INSPECTION SHOWN IN PROBLEM SYMPTOMS TABLE

3 INSPECT PRINTED WIRE INTEGRATION BOARD SUB-ASSEMBLY

(a) Check the malfunction disappears when a known good printed wire integration board sub-assembly is installed.

PM

OK:
Malfunction disappears.

NG → **REPLACE AIR CONDITIONER AMPLIFIER**

OK ↓

REPLACE PRINTED WIRE INTEGRATION BOARD SUB-ASSEMBLY

4	**INSPECT INTEGRATION PANEL SUB-ASSEMBLY**

(a) Check that the malfunction disappears when a known good integration panel sub-assembly is installed.
OK:
Malfunction disappears.

NG → **REPLACE AIR CONDITIONER AMPLIFIER**

OK ↓

REPLACE INTEGRATION PANEL SUB-ASSEMBLY