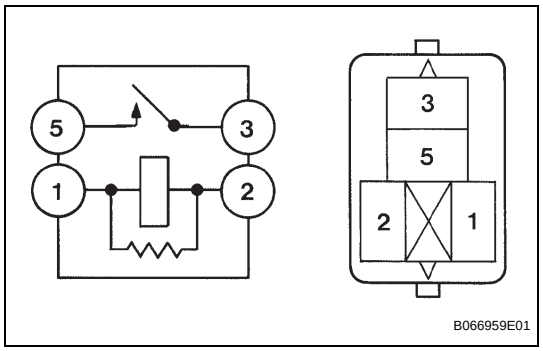

HORN RELAY

INSPECTION

1. INSPECT HORN RELAY

(a) Remove the horn relay from the instrument panel J/B.

(b) Measure the horn relay continuity.

Standard

Tester Connection	Condition	Specified Condition
1 - 2	Constant	Below 1 Ω
3 - 5	When battery voltage is applied to terminals 1 and 2	