LOW PITCHED HORN

COMPONENTS

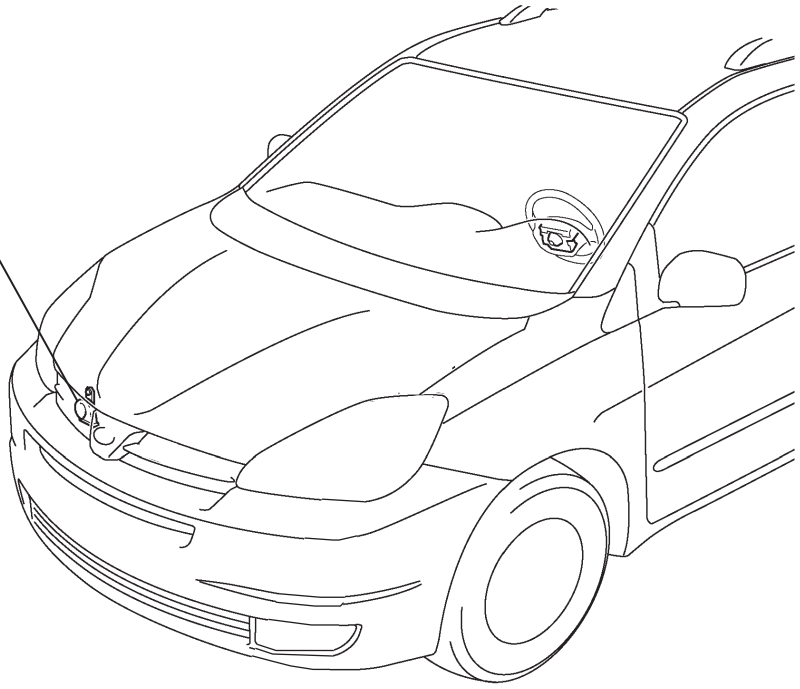

Y N*m (kgf*cm, ft.*lbf) : Specified torque

B67675
B127544E02

REMOVAL

1. **REMOVE FRONT BUMPER COVER**
   ET-3

2. **REMOVE LOW PITCHED HORN**
   (a) Disconnect the connector.
   (b) Remove the bolt and horn.

INSPECTION

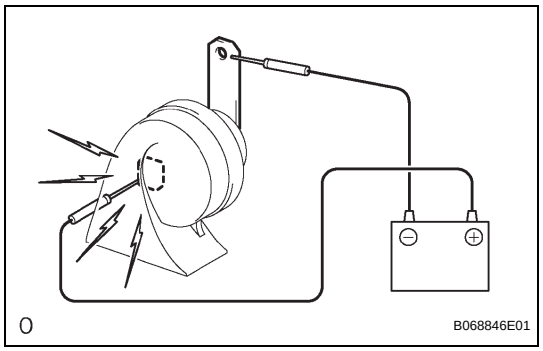

1. **INSPECT LOW PITCHED HORN**
   (a) Apply battery voltage and check operation of the horn, as shown in the table.
   Standard

Measurement Condition	Specified Condition
Battery positive (+) → Terminal 1 Battery negative (-) → Body ground	Horn sounds

INSTALLATION

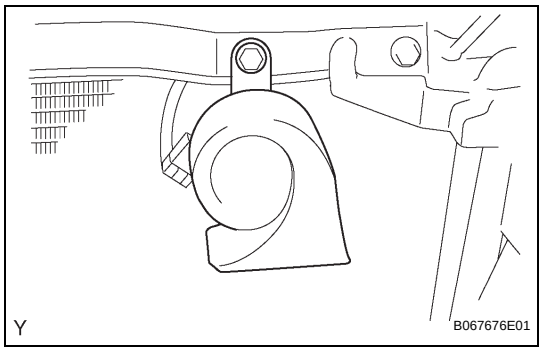

1. **INSTALL LOW PITCHED HORN**
   (a) Place the stay onto the baffle part of the radiator support upper and then install the horn with the bolt.
   Torque: 20 N*m (199 kgf*cm, 15 ft.*lbf)
   (b) Connect the connector.

2. **INSTALL FRONT BUMPER COVER**