HIGH PITCHED HORN

COMPONENTS

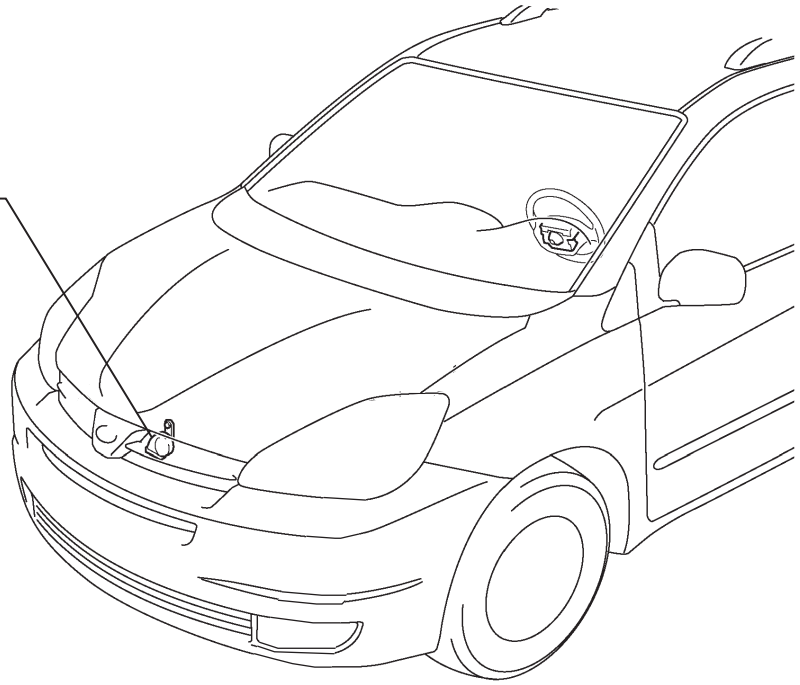

Y N*m (kgf*cm, ft.*lbf) : Specified torque

B127543E01

REMOVAL

1. **REMOVE FRONT BUMPER COVER (See page ET-3)**
2. **REMOVE HIGH PITCHED HORN**
   (a) Disconnect the connector.
   (b) Remove the bolt and horn.

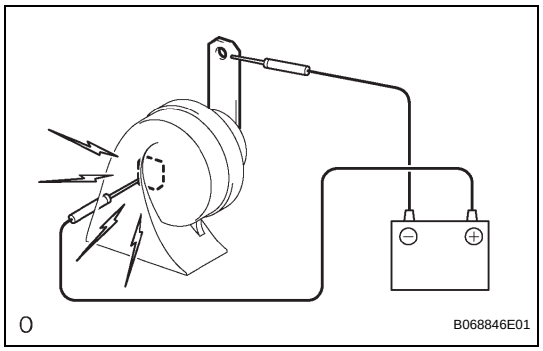

INSPECTION

1. **INSPECT HIGH PITCHED HORN**
   (a) Apply battery voltage and check operation of the horn, as shown in the table.
   Standard

Measurement Condition	Specified Condition
Battery positive (+) → Terminal 1 Battery negative (-) → Body ground	Horn sounds

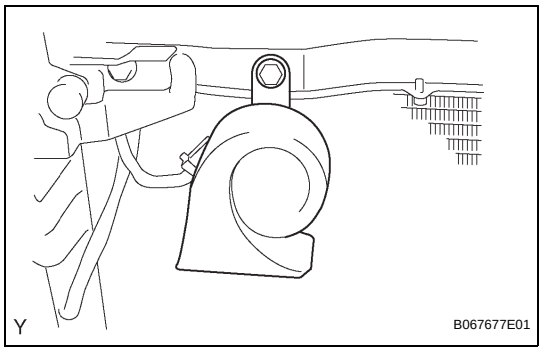

INSTALLATION

1. **INSTALL HIGH PITCHED HORN**
   (a) Install the high pitched horn with the bolt.
   Torque: 20 N*m (199 kgf*cm, 15 ft.*lbf)
   (b) Connect the connector.
2. **INSTALL FRONT BUMPER COVER**