Power Window can be Operated After Ignition Switch is Turned OFF Even if Operative Conditions are not Met

DESCRIPTION

The multiplex network body ECU controls power supplied to the power window master switch and each regulator switch continuously for 45 seconds after the ignition switch is turned OFF unless the front doors have been opened, so that the power window can be operated during this period (See page WS-3). However, if either front door is opened or if a signal from any of the front door courtesy lamp switches is input to the ECU during 45 seconds, or if 45 seconds pass with nothing being done, the multiplex network body ECU will stop supplying power, thus disabling power window operation disabled.

WIRING DIAGRAM

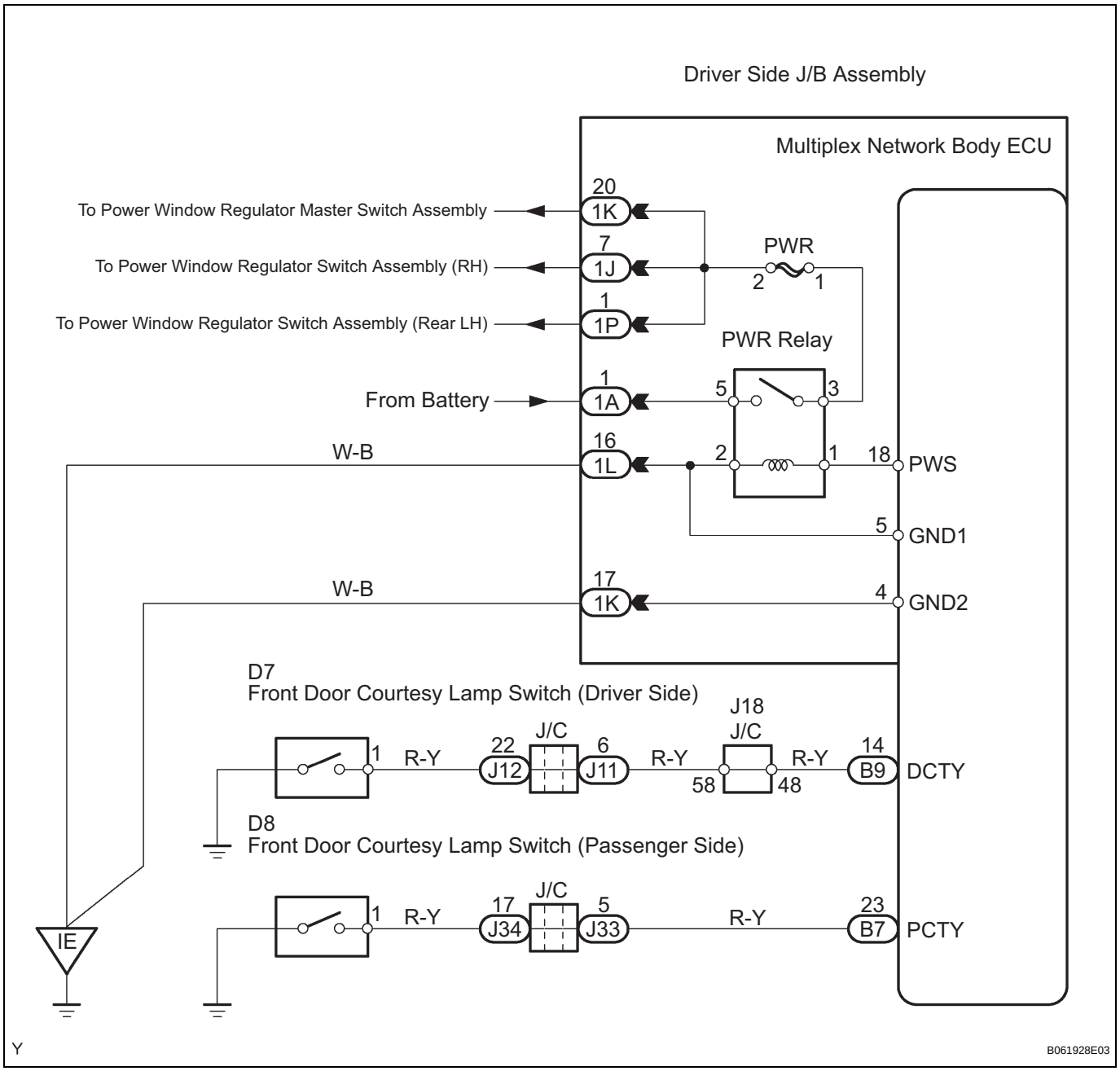

WS

INSPECTION PROCEDURE

1	CHECK CHECK OPERATION FUNCTION AFTER IGNITION SWITCH IS TURNED OFF

(a) If the power window operates even after either front door is opened within 45 seconds after the ignition switch is turned OFF, proceed to A.
(b) If the power window operates even after 45 seconds have passed after the ignition switch is turned OFF, proceed to B.

B → **REPLACE DRIVER SIDE JUNCTION BLOCK ASSEMBLY (MULTIPLEX NETWORK BODY ECU)**

A

2	READ VALUE OF INTELLIGENT TESTER

(a) Using the intelligent tester, check that the data list for proper functioning of the front door courtesy switches.

Standard (Multiplex network body ECU)

Item	Measurement Item/Display (Range)	Normal Condition	Diagnostic Note
D DOR CTY SW	Driver side door courtesy switch signal/ ON or OFF	ON: Driver side door is open OFF: Driver side door is closed	-
P DOR CTY SW	Passenger side door courtesy switch signal/ ON or OFF	ON: Passenger side door is open OFF: Passenger side door is closed	-

OK → **REPLACE DRIVER SIDE JUNCTION BLOCK ASSEMBLY (MULTIPLEX NETWORK BODY ECU)**

NG

3	INSPECT DOOR COURTESY SWITCH ASSEMBLY

WS

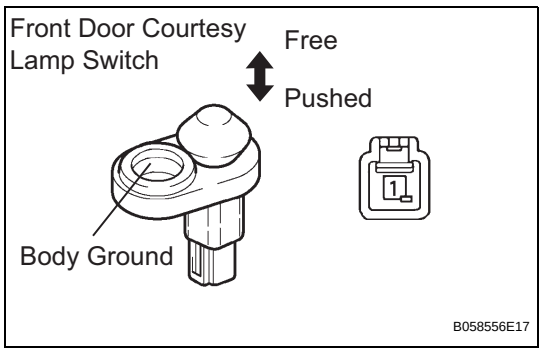

(a) Remove the courtesy lamp switch.
(b) Check the switch resistance.

Standard resistance

Terminal No.	Condition	Specified Condition
1 - Body ground	Switch pushed	10 kΩ or higher
	Switch free	Below 1 Ω

NG → **REPLACE DOOR COURTESY SWITCH ASSEMBLY**

OK

4	CHECK WIRE HARNESS (FRONT DOOR COURTESY SWITCH - MULTIPLEX NETWORK BODY ECU)

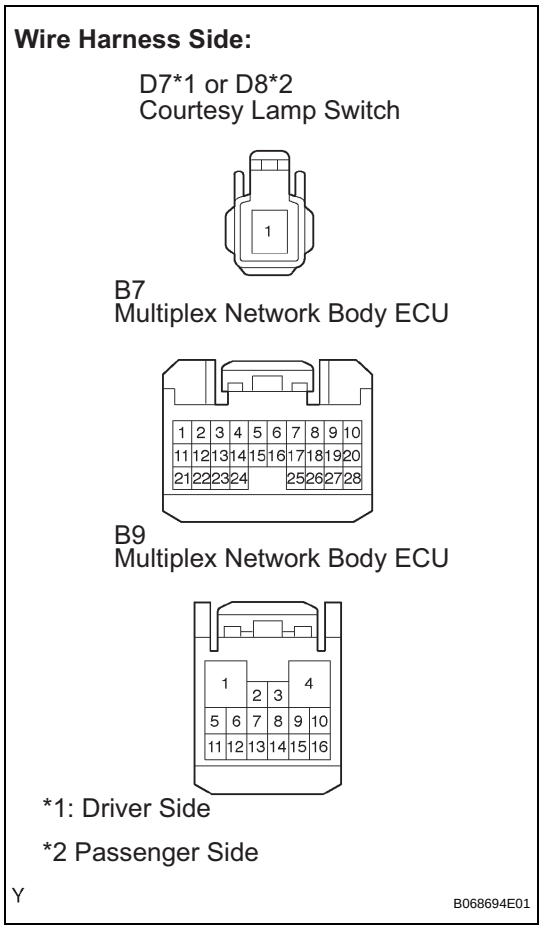

(a) Disconnect the D7 or D8 lamp switch connector.
(b) Disconnect the B7 or B9 ECU connector.
(c) Check the resistance between the wire harness side connectors.

Standard resistance

Terminal No.	Specified Condition
D7-1 - B9-14 (DCTY)	Below 1 Ω
D8-1 - B7-23 (PCTY)	Below 1 Ω

NG → **REPAIR OR REPLACE HARNESS AND CONNECTOR**

OK

REPLACE DRIVER SIDE JUNCTION BLOCK ASSEMBLY (MULTIPLEX NETWORK BODY ECU)