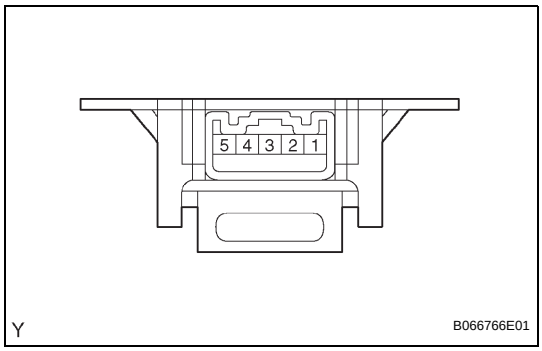

REAR POWER WINDOW SWITCH

INSPECTION

1. INSPECT POWER WINDOW REGULATOR SWITCH ASSEMBLY REAR

(a) Check the resistance between the switch terminals when the switch is operated.

Standard

Terminal No.	Regulator Switch	Specified Condition
1 - 2, 3 - 4	UP	Below 1 Ω
1 - 2, 4- 5	OFF	
2 - 3, 4 - 5	DOWN	

If the result is not as specified, replace the switch assembly.