WINDSHIELD GLASS

COMPONENTS

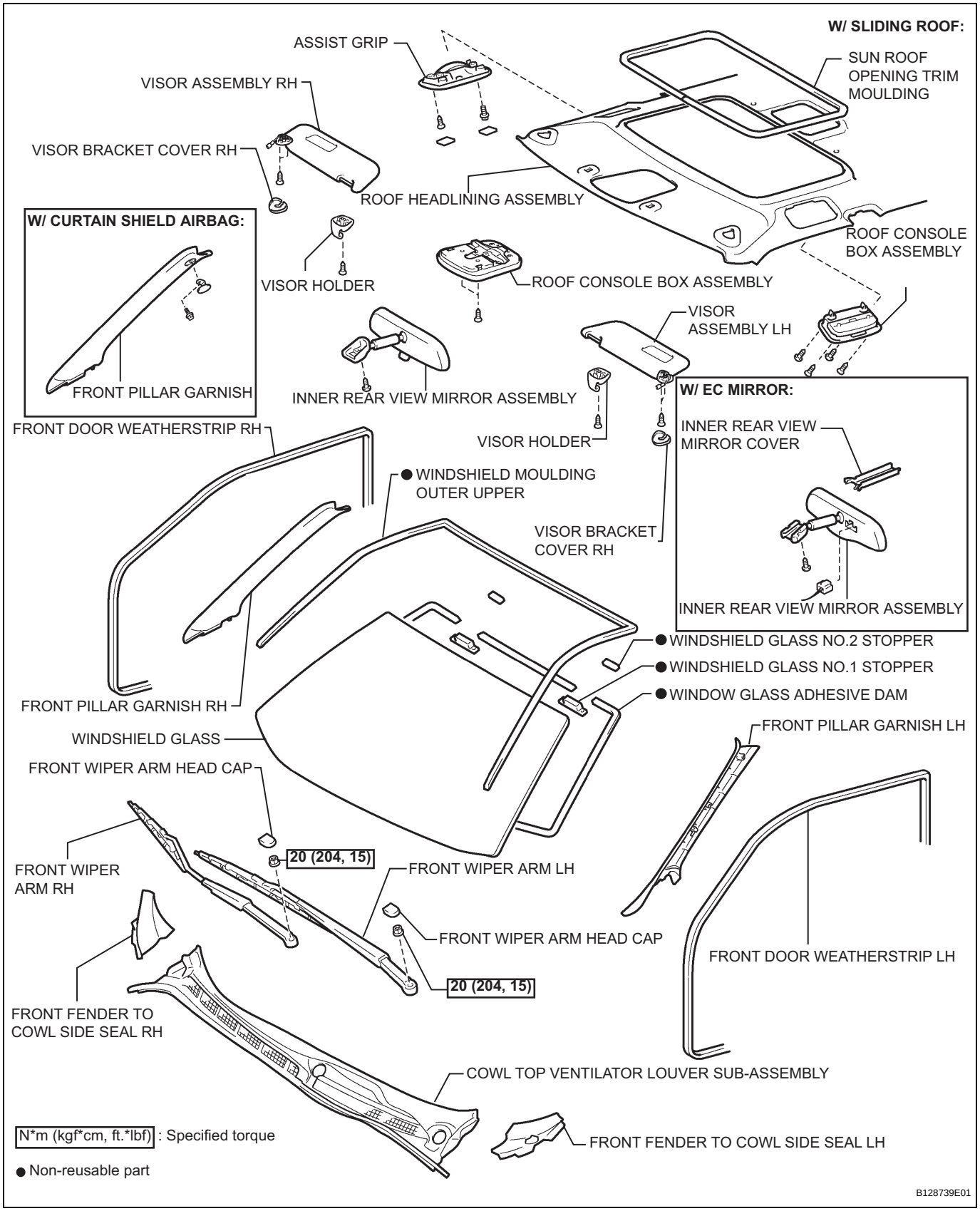

WS

REMOVAL

1. **REMOVE FRONT DOOR OPENING TRIM WEATHERSTRIP LH**
2. **REMOVE FRONT DOOR OPENING TRIM WEATHERSTRIP RH**
3. **REMOVE FRONT PILLAR GARNISH LH**
4. **REMOVE FRONT PILLAR GARNISH RH**
5. **REMOVE VISOR ASSEMBLY LH**
6. **REMOVE VISOR ASSEMBLY RH**
7. **REMOVE ASSIST GRIP SUB-ASSEMBLY (See page IR-12)**
8. **REMOVE VISOR HOLDER (See page IR-11)**
9. **REMOVE ROOF CONSOLE BOX ASSEMBLY**
10. **REMOVE SUN ROOF OPENING TRIM MOULDING (W/ SLIDING ROOF)**
11. **REMOVE INNER REAR VIEW MIRROR ASSEMBLY**
12. **REMOVE ROOF HEADLINING ASSEMBLY (See page IR-14)**
13. **REMOVE FRONT WIPER ARM HEAD CAP**
14. **REMOVE FRONT WIPER ARM LH (See page WW-4)**
15. **REMOVE FRONT WIPER ARM RH (See page WW-4)**
16. **REMOVE FRONT FENDER TO COWL SIDE SEAL LH**
17. **REMOVE FRONT FENDER TO COWL SIDE SEAL RH**
18. **REMOVE COWL TOP VENTILATOR LOUVER SUB-ASSEMBLY**
19. **REMOVE WINDSHIELD MOULDING OUTER UPPER**
    (a) Using a knife, cut off the moulding, as shown in the illustration.
    NOTICE:
    Do not damage the vehicle body with the knife.
    (b) Remove the remaining moulding.
    HINT:
    When removing, make a partial a cut, then pull and remove it by hand.
    (c) w/ Deicer:
    Disconnect the connector, as shown in the illustration.

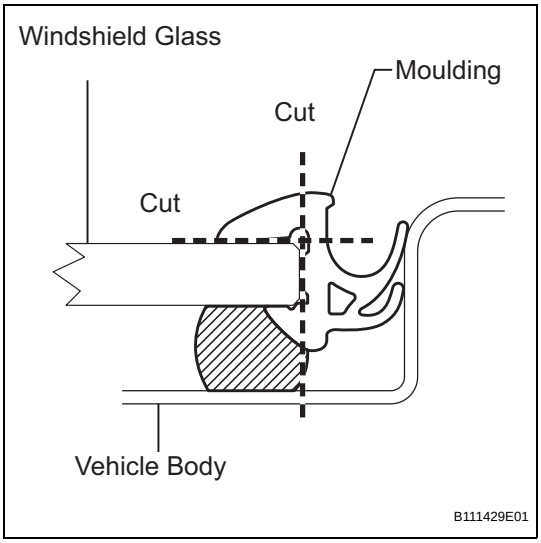

WS

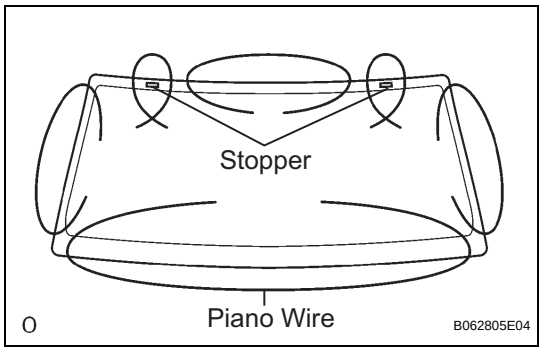

20. REMOVE WINDSHIELD GLASS

(a) Pass a piano wire between the vehicle body and glass from the interior.

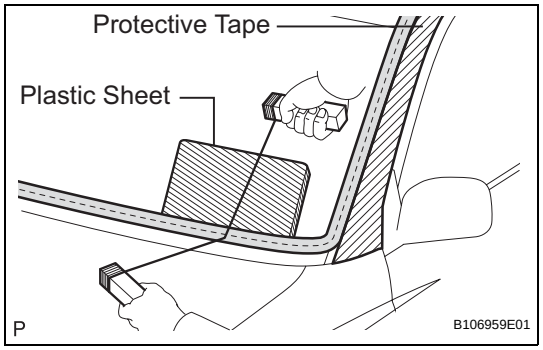

(b) Tie both wire ends to wooden blocks or similar objects.
HINT:
Apply protective tape to the outer surface of the vehicle body to prevent its surface from being scratched.
NOTICE:
- **When separating the glass from the vehicle, be careful not to damage the vehicle's paint or interior/exterior ornaments.**
- **To prevent the safety pad from being scratched when removing the glass, place a plastic sheet between the piano wire and safety pad.**

(c) Cut off the adhesive by pulling piano wire around the glass.
(d) Disengage the stoppers.
(e) Using a suction cup, remove the glass.
NOTICE:
Leave as much adhesive on the vehicle body as possible when removing the glass.

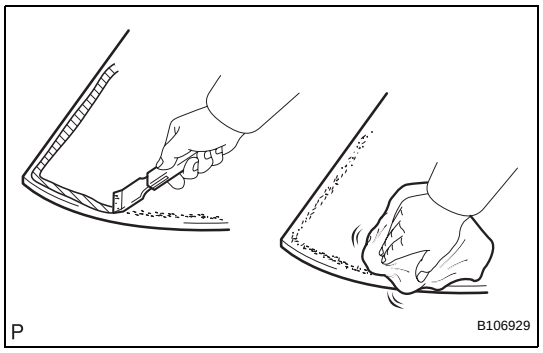

21. CLEAN WINDSHIELD GLASS

(a) Using a scraper, remove the damaged stoppers, dams and adhesive sticking to the glass.
(b) Clean the outer circumference of the glass with white gasoline.
NOTICE:
Do not touch the glass surface after cleaning it.

WS