REAR SIDE WINDOW GLASS

COMPONENTS

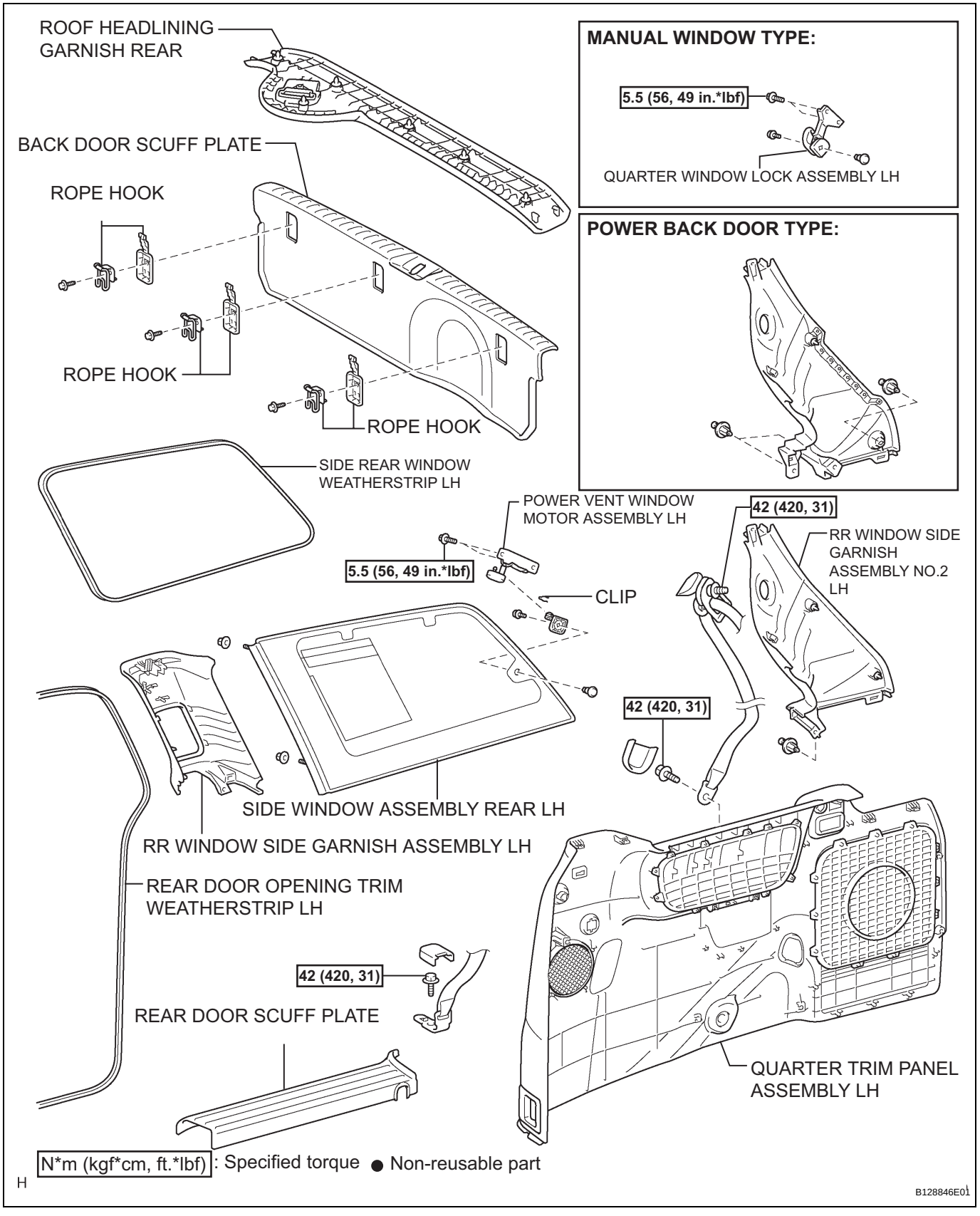

WS

REMOVAL

HINT:
On the RH side, use the same procedures as on the LH side.

1. **REMOVE REAR NO. 1 SEAT ASSEMBLY LH**
   HINT:
   - Captain seat type: See page SE-68
   - Center seat type: See page SE-77
2. **REMOVE REAR DOOR WEATHERSTRIP LH**
3. **REMOVE ROPE HOOK ASSEMBLY**
4. **REMOVE BACK DOOR SCUFF PLATE (See page IR-8)**
5. **REMOVE ROOF HEADLINING GARNISH REAR**
6. **REMOVE REAR DOOR SCUFF PLATE LH**
7. **REMOVE QUARTER TRIM PANEL ASSEMBLY LH**
8. **REMOVE RR WINDOW SIDE GARNISH ASSEMBLY NO.2 LH**
9. **REMOVE RR WINDOW SIDE GARNISH ASSEMBLY LH**
10. **REMOVE SIDE WINDOW ASSEMBLY REAR LH**
    (a) Disconnect the connectors.
    (b) Remove the 2 nuts and 2 bolts.
    Torque: Bolt
    5.5 N*m (56 kgf*cm, 49 in.*lbf)
    (c) Remove the window.

Power Window Type:

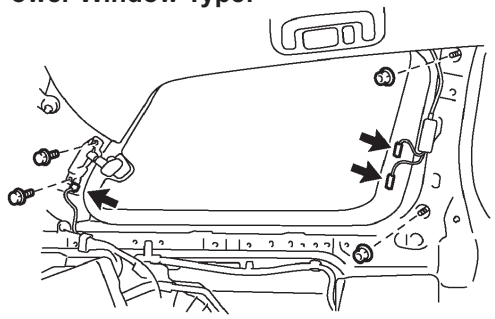

Manual Window Type:

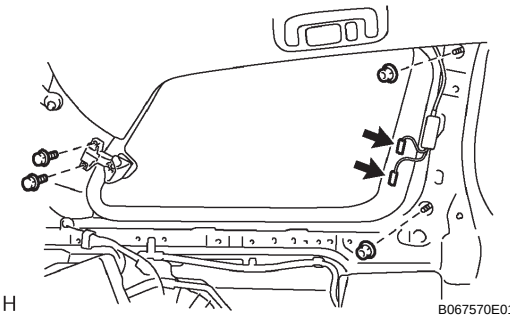

H B067570E01

WS

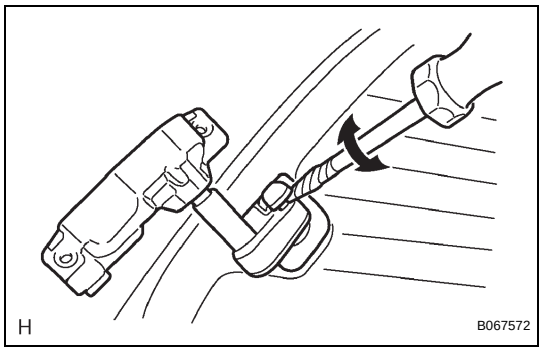

11. REMOVE POWER VENT WINDOW MOTOR ASSEMBLY LH (POWER WINDOW TYPE)

(a) Using a screwdriver, remove the window motor.

12. REMOVE QUARTER WINDOW LOCK ASSEMBLY LH (MANUAL WINDOW TYPE)

(a) Remove the screw and window lock.

13. REMOVE SIDE REAR WINDOW WEATHERSTRIP LH