# BACK DOOR GLASS

## COMPONENTS

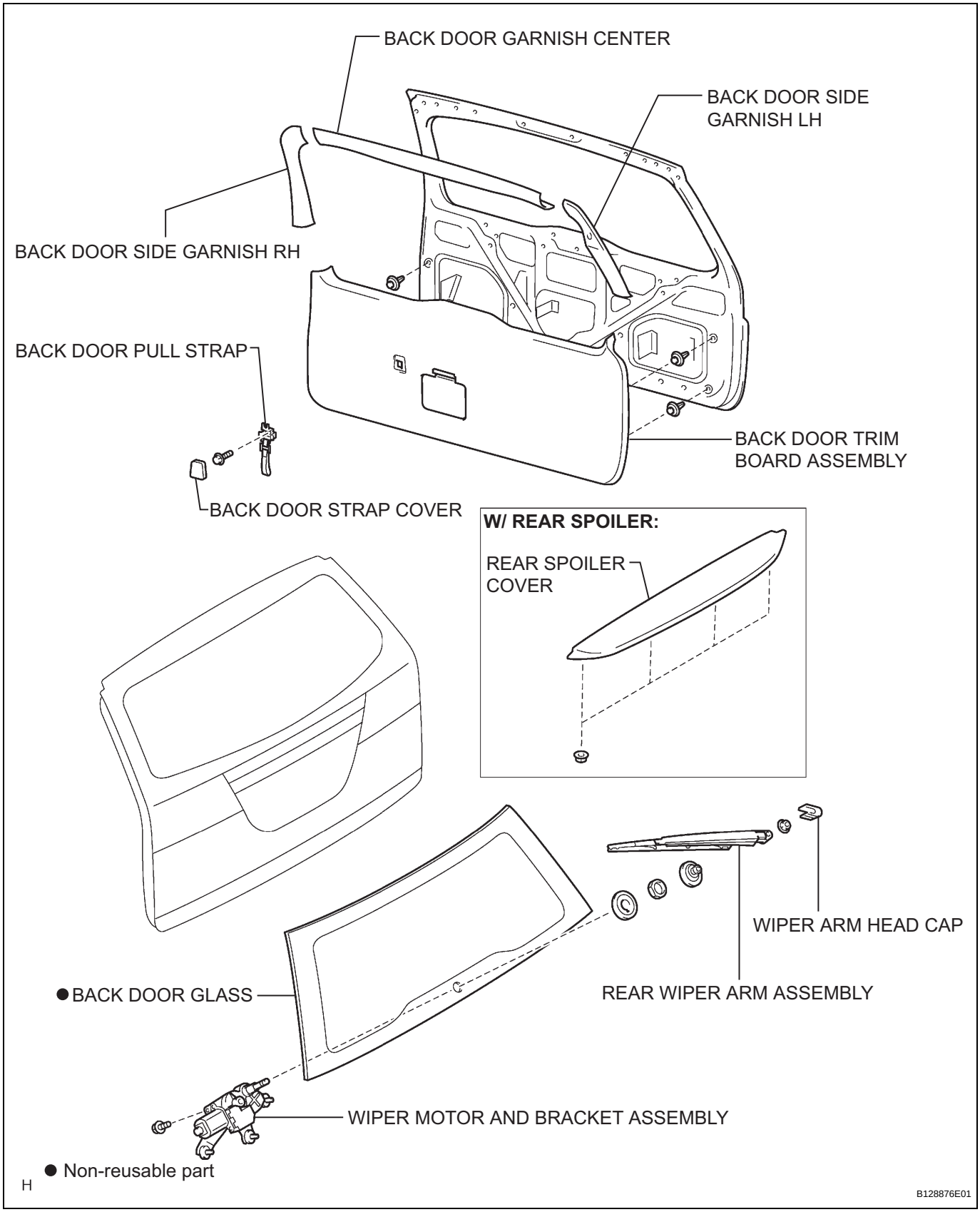


WS

# REMOVAL

1. **REMOVE BACK DOOR GARNISH CENTER**
2. **REMOVE BACK DOOR SIDE GARNISH LH**
3. **REMOVE BACK DOOR SIDE GARNISH RH**
4. **REMOVE BACK DOOR STRAP COVER**
5. **REMOVE BACK DOOR PULL STRAP**
6. **REMOVE BACK DOOR TRIM BOARD ASSEMBLY**
7. **REMOVE BACK DOOR SERVICE HOLE PLATE**
8. **REMOVE REAR SPOILER COVER (W/ REAR SPOILER)**
9. **REMOVE FRONT WIPER ARM HEAD CAP**
10. **REMOVE REAR WIPER ARM**
11. **REMOVE REAR WIPER MOTOR AND BRACKET ASSEMBLY**
12. **REMOVE BACK DOOR GLASS**
    (a) Pass a piano wire between the body and glass from the interior.

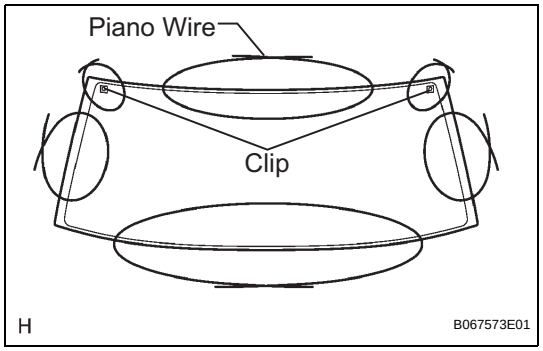


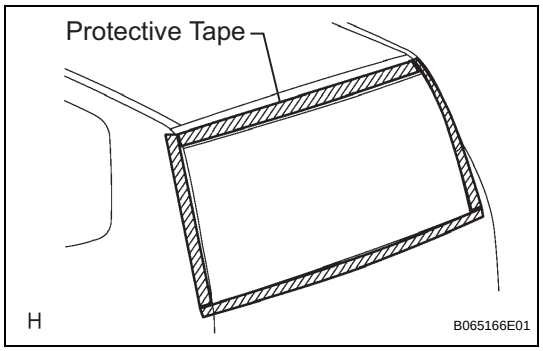


(b) Tie both wire ends to wooden blocks or similar objects.
HINT:
Apply protective tape to the outer surface to prevent the surface from being scratched.
**NOTICE:**
**When separating the glass, take care not to damage the paint and interior and exterior ornaments.**

(c) Cut off the adhesive by pulling piano wire around it.

(d) Using a suction rubber, remove the glass.
**NOTICE:**
**Leave as much adhesive on the body as possible when removing the glass.**

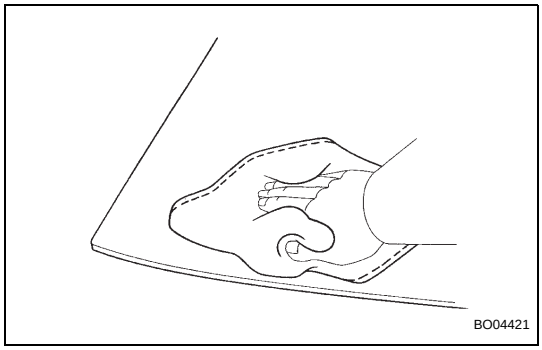


**13. CLEAN BACK DOOR GLASS**

(a) Clean the outer circumference of the glass white gasoline.

**NOTICE:**

- **Do not touch the glass surface after cleaning it.**
- **Be careful not to damage the body.**

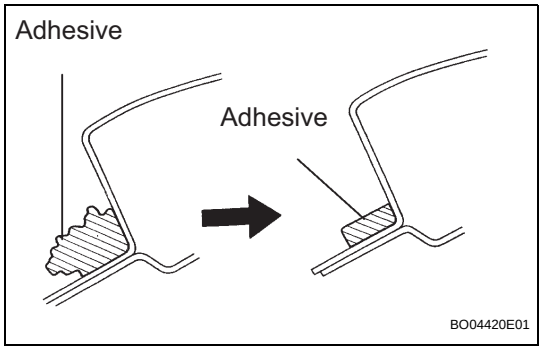


# INSTALLATION

**1. INSTALL BACK DOOR GLASS**

(a) Clean and shape the contact surface of the vehicle body.

(1) Using a knife, cut away any rough adhesive on the contact surface of the body to ensure the appropriate surface shape.
HINT:
Leave as much adhesive on the body as possible.

(2) Clean the contact surface of the body with a shop rag saturated with cleaner.
HINT:
Even if all the adhesive has been remove, clean the body.

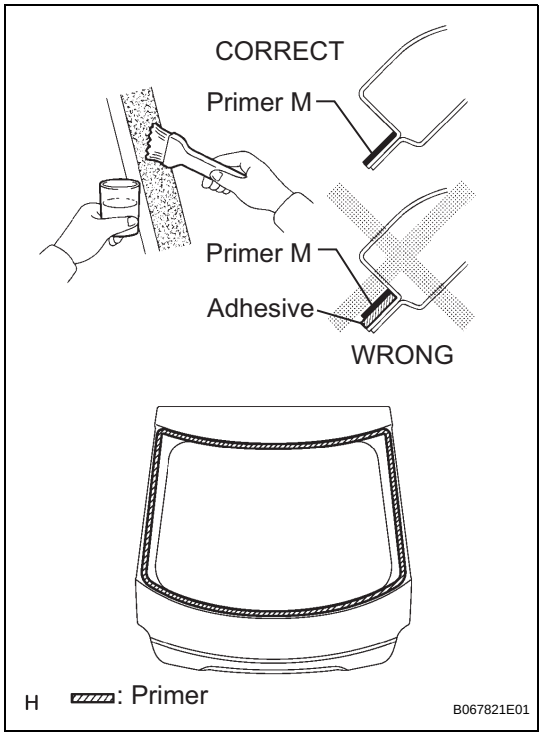


(b) Using a brush, coat the exposed part of the body on the vehicle side with Primer M.

**NOTICE:**

- **Allow the primer coating to dry for 3 minutes or more.**
- **Do not coat the adhesive with Primer M.**
- **Do not keep any of the opened Primer M for later use.**

(c) Using a brush or sponge, coat the edge of the glass and the contact surface with Primer G.
HINT:
If an area other than that specified is coated by accident, wipe of the primer with a clean shop rag before it dries.

**NOTICE:**

- **Allow the primer coating to dry for 3 minutes or more.**
- **Do not keep any of the opened Primer G for later use.**

**Backside:**

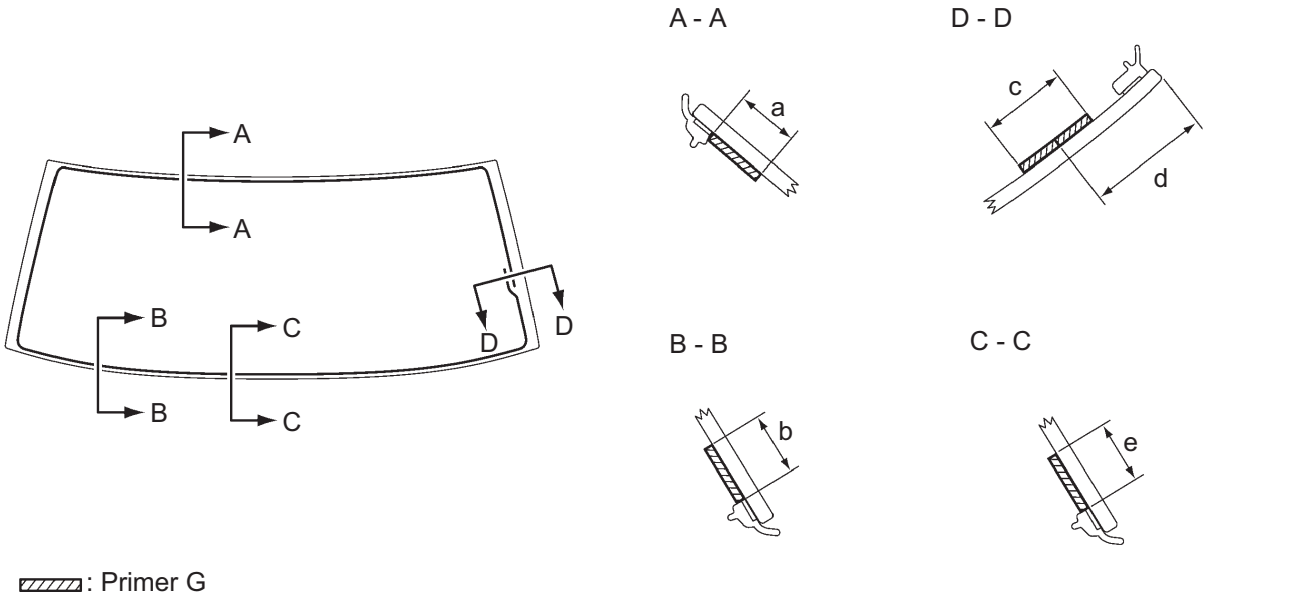


**Dimensions:**

| | |
|---|---|
| a | 15.0 mm (0.591 in.) |
| b | 15.0 mm (0.591 in.) |
| c | 20.0 mm (0.787 in.) |
| d | 30.0 mm (1.181 in.) |
| e | 15.0 mm (0.591 in.) |

(d) Apply adhesive.

**Adhesive:**

**Part No. 08850-00801 or equivalent**

(1) Cut off the tip of the cartridge nozzle, as shown in the illustration.

HINT:

After cutting off the tip, use all adhesive within the time described in the table below.

**Tackfree time**

| Temperature | Tackfree time |
|---|---|
| **35°C (95°F)** | **15 minutes** |
| **20°C (68°F)** | **100 minutes** |
| **5°C (41°F)** | **8 hours** |

(2) Load the sealer gun with the cartridge.

WS

(3) Coat the glass with adhesive, as shown in the illustration.

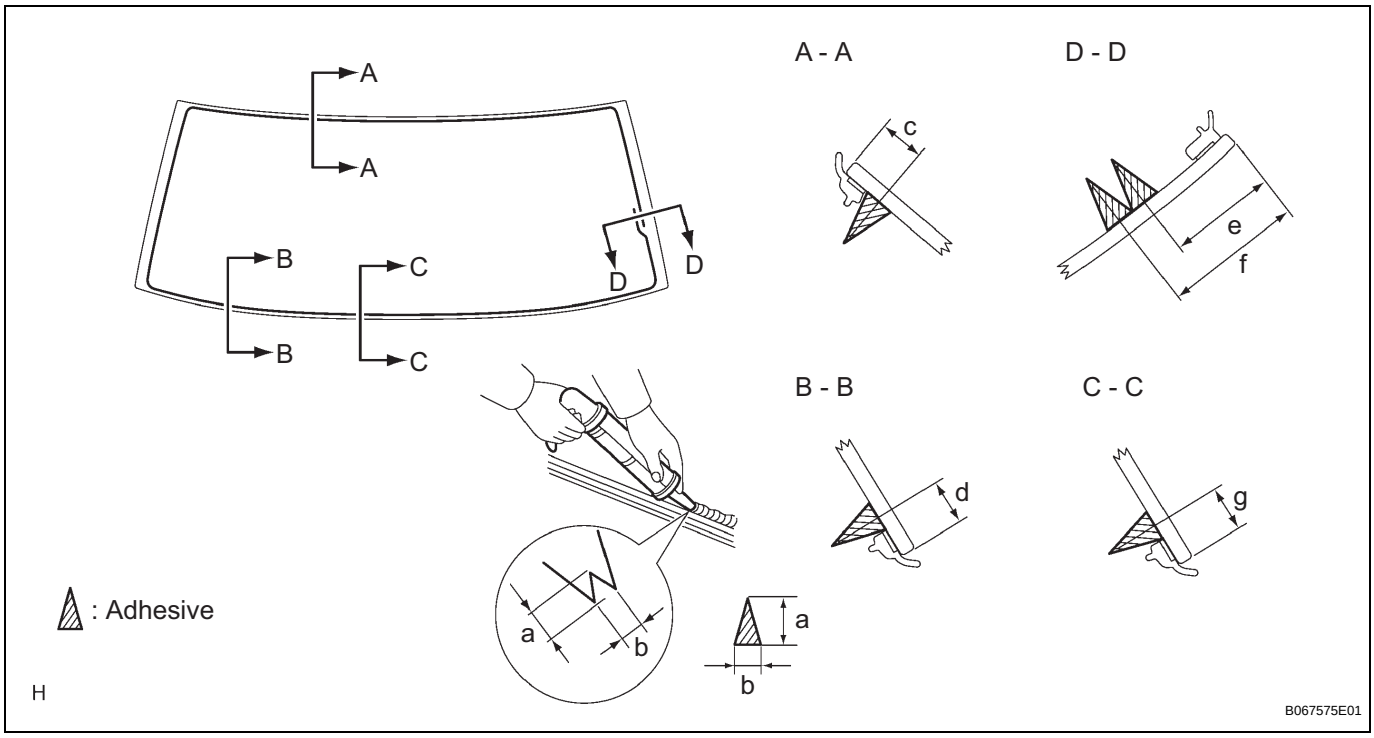


**Dimensions:**

| | |
|---|---|
| a | 12.0 mm (0.472 in.) |
| b | 8.0 mm (0.315 in.) |
| c | 11.0 mm (0.433 in.) |
| d | 11.0 mm (0.433 in.) |
| e | 30.0 mm (1.181 in.) |
| f | 38.0 mm (1.496 in.) |
| g | 11.0 mm (0.433 in.) |

(e) Install the glass to the body.

(1) Hold the back window glass in place securely with tape or equivalent to the body until the adhesive has hardened.

**NOTICE:**

- **Allow the primer coating to dry for 3 minutes or more.**
- **Check that the clips are attached to the body correctly.**
- **Check the clearance between the body and glass.**

(2) Lightly press the front surface of the glass to ensure a close fit.

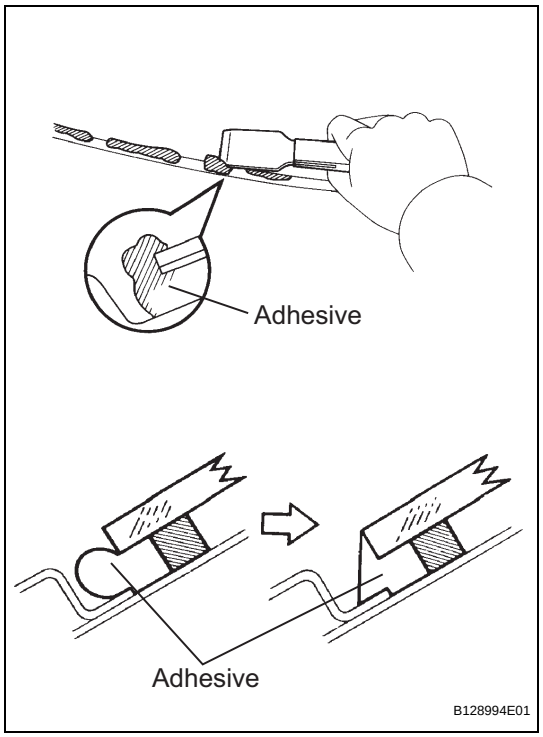


(3) Using a scraper, remove any excess or protruding adhesive.
HINT:
Apply adhesive onto the glass rim.
**NOTICE:**
**Take care not to drive the vehicle for the time described in the table below.**
**Minimum time**

| Temperature | Minimum time prior to driving vehicle |
|---|---|
| 35°C (95°F) | 1.5 hours |
| 20°C (68°F) | 5 hours |
| 5°C (41°F) | 24 hours |

**2. CHECK FOR LEAKAGE AND REPAIR**
(a) Conduct a leak test after the adhesive has completely hardened.
(b) Seal any leaks with auto glass sealer.

**3. INSTALL REAR WIPER MOTOR AND BRACKET ASSEMBLY**

**4. INSTALL REAR WIPER ARM**

**5. INSTALL FRONT WIPER ARM HEAD CAP**

**6. INSTALL REAR SPOILER COVER (W/ REAR SPOILER)**

**7. INSTALL BACK DOOR SERVICE HOLE PLATE**

**8. INSTALL BACK DOOR TRIM BOARD ASSEMBLY**

**9. INSTALL BACK DOOR PULL STRAP**

**10. INSTALL BACK DOOR STRAP COVER**

**11. INSTALL BACK DOOR SIDE GARNISH RH**

**12. INSTALL BACK DOOR SIDE GARNISH LH**

**13. INSTALL BACK DOOR GARNISH CENTER**