PROBLEM SYMPTOMS TABLE

WINDOW DEFOGGER SYSTEM

Symptom	Suspected area	See page
w/ Deicer: Front window deicer does not operate. (indicator light ON)	1. FR DEF fuse	-
	2. Front window deicer relay	WS-69
	3. Front window deicer wire	-
	4. Wire harness	-
w/ deicer: Front window deicer does not operate. (indicator light OFF)	1. FR DEF fuse	-
	2. Front window deicer relay	WS-69
	3. Front window deicer wire	-
	4. Hazard warning signal switch assembly (Defogger switch)	-
	5. Wire harness	-
Rear window defogger does not operate (indicator light ON)	1. HTR fuse	-
	2. Rear window defogger relay	WS-69
	3. Rear window deicer wire	-
	4. Wire harness	-
Rear window defogger does not operate (indicator light OFF)	1. HTR fuse	-
	2. Rear window defogger relay	WS-70
	3. Hazard warning signal switch assembly (Defogger switch)	-
	4. Rear window defogger wire	-
	5. Wire harness	-
w/ Mirror Heater: Mirror heater does not operate (indicator light ON)	1. MIR HTR fuse	-
	2. Outer rear view mirror assembly	MI-42
	3. Wire harness	-
w/ Mirror Heater: Mirror heater does not operate (indicator light OFF)	1. MIR HTR fuse	-
	2. Hazard warning signal switch assembly (Defogger switch)	MI-42
	3. Outer rear view mirror assembly	-
	4. Wire harness	-

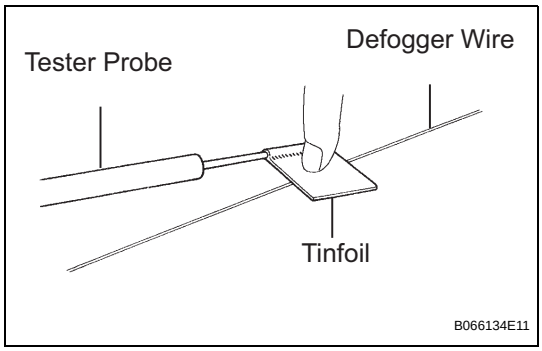

ON-VEHICLE INSPECTION

1. INSPECT BACK WINDOW (DEFOGGER WIRE)

NOTICE:

- **When cleaning the glass, wipe the glass along the wire using a soft and dry cloth. Take care not to damage the wires.**
- **Do not use detergents or glass cleaners including abrasive ingredients.**
- **When measuring voltage, wrap a piece of tin foil around the tip of the negative probe and press the foil against the wire with your finger, as shown in the illustration.**

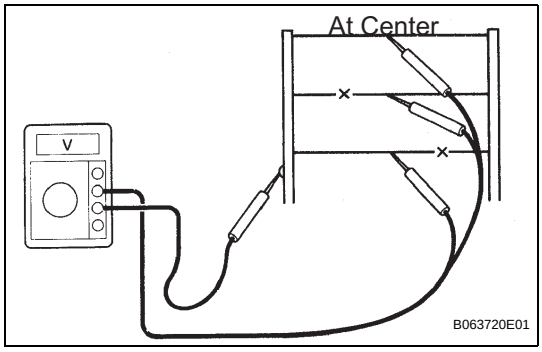

(a) Turn the ignition switch ON.

(b) Turn the defogger switch ON.

WS

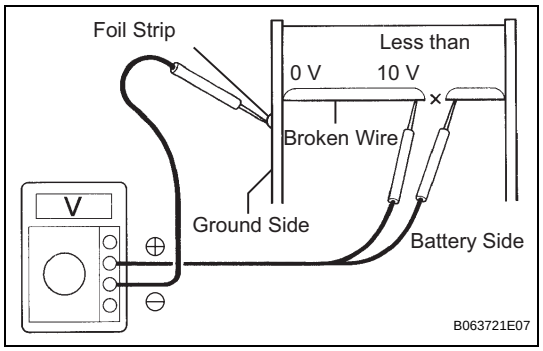

(c) Inspect the voltage at the center of each defogger wire, as shown in the illustration.

Standard voltage

Voltage	Criteria
Approx. 5 V	Okay, wire is not broken
Approx. 10 V to 0 V	Wire is broken

HINT:
If there is approximately 10 V, the wire may be broken between the center of the wire and the end on the battery side. If there is no voltage, the wire may be broken between the center of the wire and the end on the ground side.

(d) Place the voltmeter positive (+) lead against the defogger wire on the battery side.
(e) Place the voltmeter negative (-) lead with the foil strip against the wire on the ground side.
(f) Slide the positive (+) lead from the battery side to the ground side.
(g) The point where the voltmeter deflects from approx 10 V to 0 V is the place where the defogger wire is broken.

HINT:
If the defogger wire is not broken, the voltmeter indicates 0 V at the positive (+) end of the defogger wire but gradually increases to about 12 V as the meter probe moves to the other end.

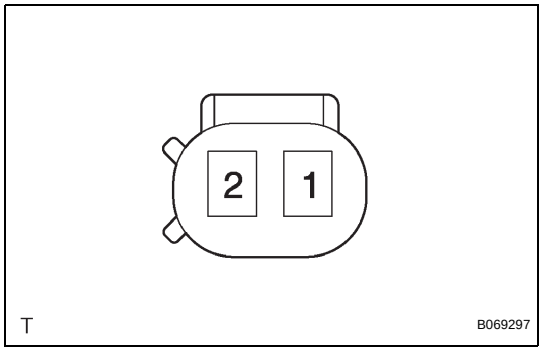

2. INSPECT WIRE HARNESS (FRONT WINDOW DEICER WIRE)

(a) Inspect the resistance of the deicer wire.

Standard resistance

Terminal No.	Condition	Specified Condition
1 - 2	Constant	Below 1 Ω

If the result is not as specified, replace the window.

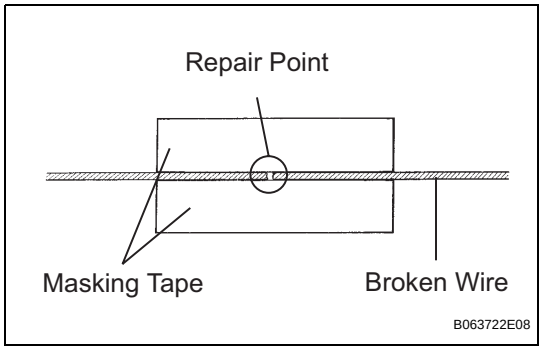

REPAIR

1. REPAIR REAR WINDOW DEFOGGER WIRE

(a) Clean the broken wire tips with grease, wax and silicone remover.
(b) Place the masking tape along the both sides of the wire.
(c) Thoroughly mix the repair agent (Dupont paste No. 4817).

WS

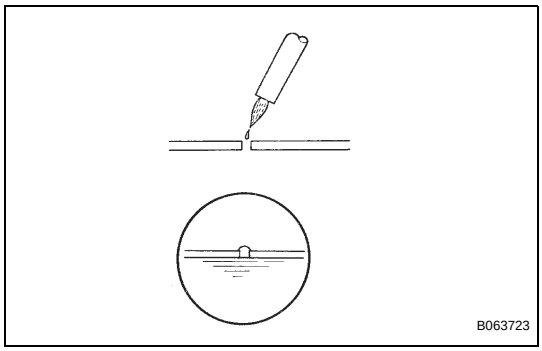

(d) Using a fine tip brush, apply a small amount of the agent to the wire.
(e) After a few minutes, remove the masking tape.
NOTICE:
Do not repair the defogger wire again for at least 24 hours.