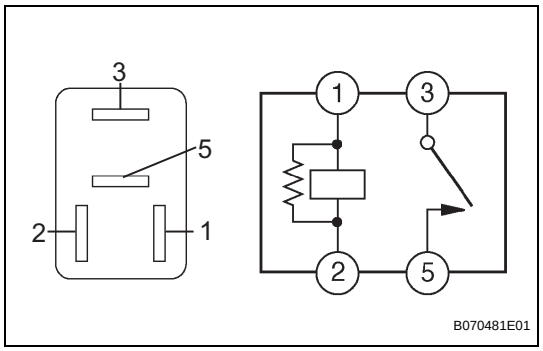


# WINDSHIELD DEICER RELAY

## ON-VEHICLE INSPECTION

**1. INSPECT FR WIPER DEICER RELAY**

(a) Inspect the resistance.

**Standard resistance**

| Terminal No. | Specified Condition |
|---|---|
| 3 - 5 | 10 kΩ or higher |
| | Below 1 Ω (When battery voltage is applied to terminals 1 and 2) |

If the result is not as specified, replace the relay.