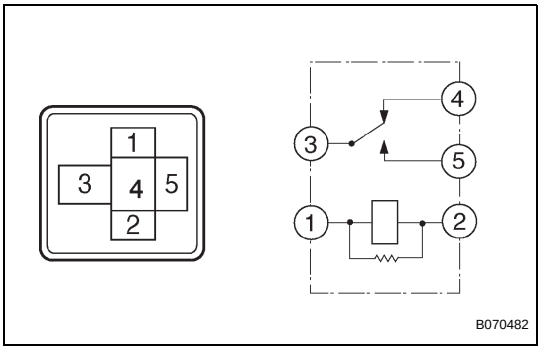

DEFOGGER RELAY

ON-VEHICLE INSPECTION

1. INSPECT DEFOGGER RELAY

(a) Inspect the resistance.

Standard resistance

Terminal No.	Specified Condition
3 - 4	Below 1 Ω
3 - 5	10 kΩ or higher
	Below 1 Ω (When battery voltage is applied to terminals 1 and 2)

If the result is not as specified, replace the relay.