# Mirror Motor Circuit

## DESCRIPTION

A mirror control switch signal and memorized mirror positions are sent to the outer mirror control ECU. The outer mirror control ECU drives the selected mirror UP, DOWN, LEFT and RIGHT in response to the inputs.

HINT:

The power mirror control system is part of the large-scale multiplex communication system. This system features shared communication wiring that reduces the wiring complexity of the communication lines. The first step in any repair is to confirm the proper operation of the communication system. Proceed with troubleshooting after the communication has been verified (See Multiplex Communication System) (See page MP-4).

## WIRING DIAGRAM

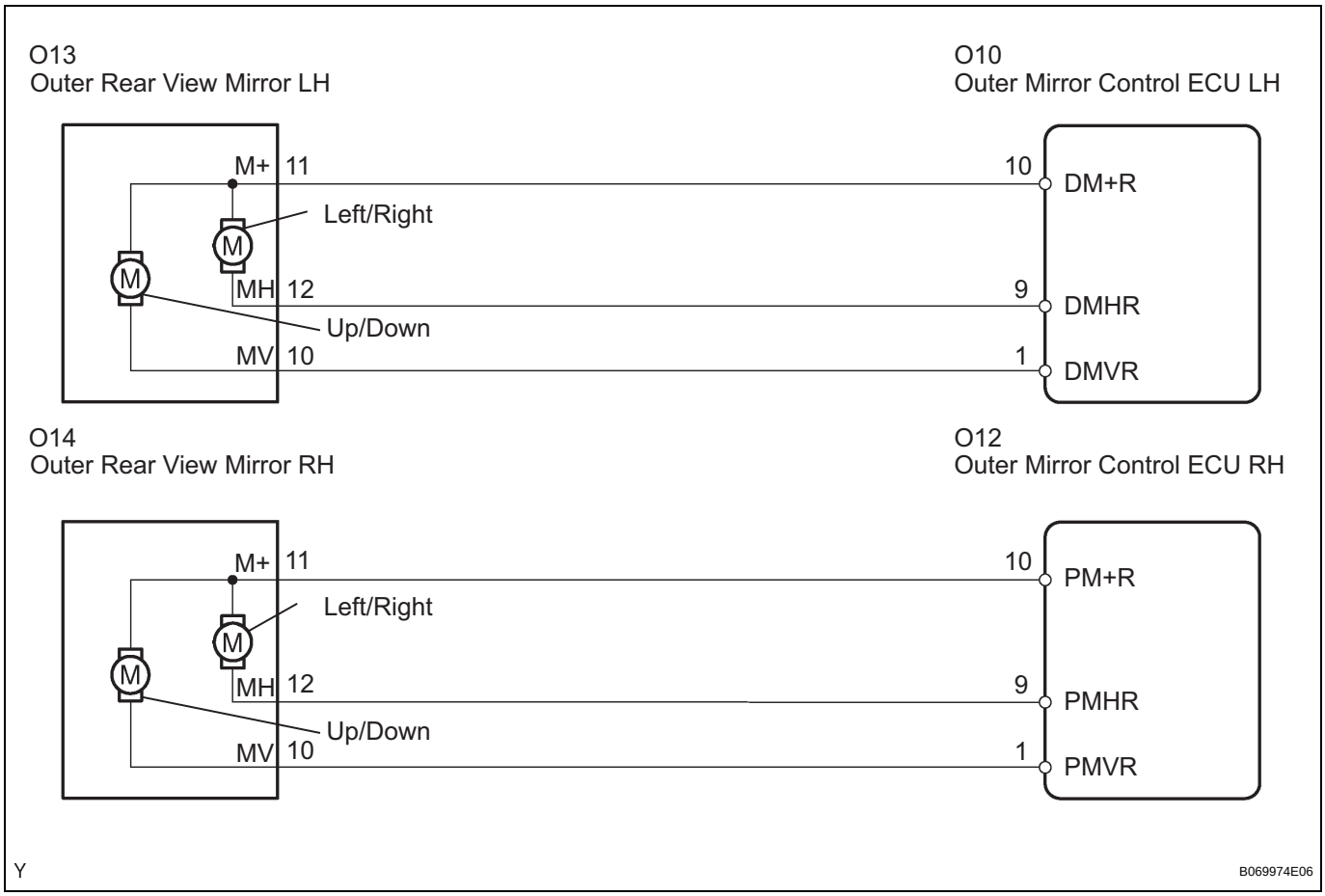


## INSPECTION PROCEDURE

| 1 | PERFORM ACTIVE TEST USING INTELLIGENT TESTER |
|---|---|

(a) Connect the intelligent tester to the DLC3.
(b) Ignition switch on.
(c) Enter the following menus: DIAGNOSIS / ENHANCED OBD II / ACTIVE TEST.

MI

(d) Select the ACTIVE TEST, use the intelligent tester to issue a control command, and then check that the outer rear view mirrors.

**MIRROR-L/MIRROR-R**

| Item | Test Details |
|---|---|
| MIRR UP/DOWN | Mirror vertical operation: UP/DOWN |
| MIRR RIGHT/LEFT | Mirror horizontal operation: RIGHT/LEFT |

**OK:**
**Outer mirror operate normally.**

**OK** → **PROCEED TO NEXT CIRCUIT INSPECTION SHOWN IN PROBLEM SYMPTOMS TABLE**

**NG**

## 2 INSPECT OUTER REAR VIEW MIRROR

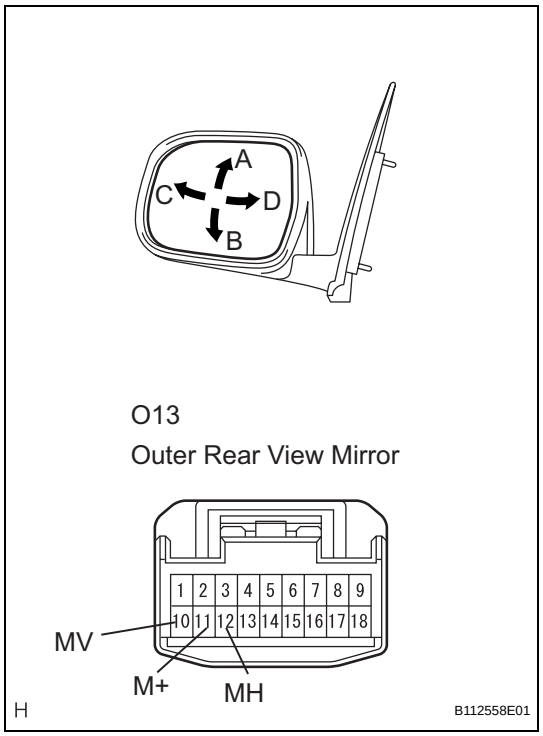


(a) Outer rear view mirror LH:
Disconnect the O13 connector.

(b) Apply battery voltage and check operation of the mirror face.

**Standard**

| Measurement Condition (Symbols) | Mirror Operation |
|---|---|
| Battery positive (+) → O13-10 (MV)<br>Battery negative (-) → O13-11 (M+) | Turns upward (A) |
| Battery positive (+) → O13-11 (M+)<br>Battery negative (-) → O13-10 (MV) | Turns downward (B) |
| Battery positive (+) → O13-12 (MH)<br>Battery negative (-) → O13-11 (M+) | Turns left (C) |
| Battery positive (+) → O13-11 (M+)<br>Battery negative (-) → O13-12 (MH) | Turns right (D) |

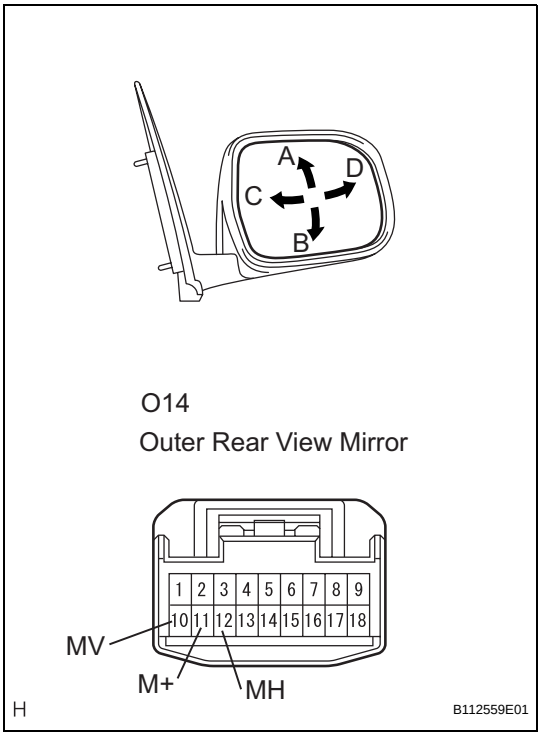


(c) Outer rear view mirror RH:
Disconnect the O14 connector.

(d) Apply battery voltage and check operation of the mirror face.

**Standard**

| Measurement Condition (Symbols) | Mirror Operation |
|---|---|
| Battery positive (+) → O14-10 (MV)<br>Battery negative (-) → O14-11 (M+) | Turns upward (A) |
| Battery positive (+) → O14-11 (M+)<br>Battery negative (-) → O14-10 (MV) | Turns downward (B) |
| Battery positive (+) → O14-12 (MH)<br>Battery negative (-) → O14-11 (M+) | Turns left (C) |
| Battery positive (+) → O14-11 (M+)<br>Battery negative (-) → O14-12 (MH) | Turns right (D) |

**NG** → **REPLACE OUTER REAR VIEW MIRROR**

**OK**

## 3 CHECK HARNESS AND CONNECTOR (OUTER REAR VIEW MIRROR - OUTER MIRROR CONTROL ECU)

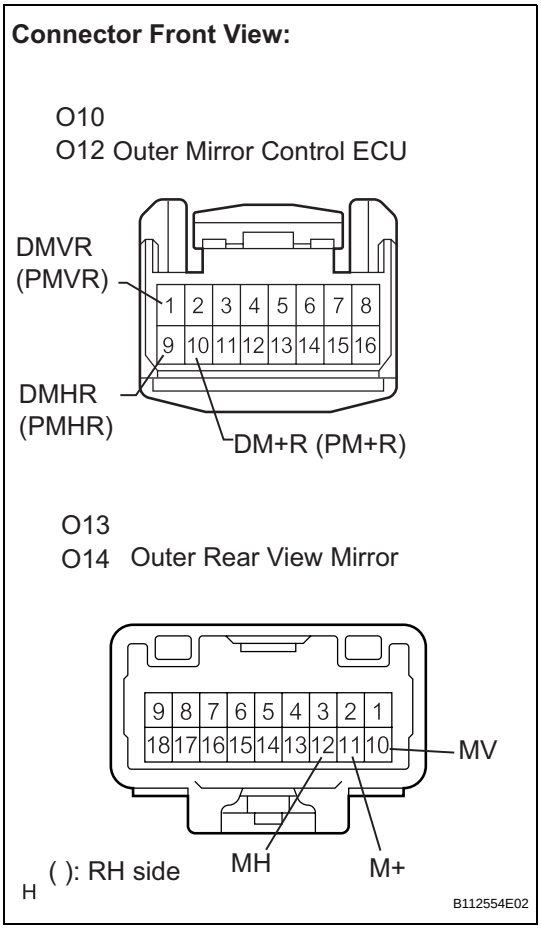


(a) Disconnect the O10 or O12 ECU connector.

(b) Measure the resistance according to the value(s) in the table below.

**Resistance**

| Terminals No. (Symbols) | Condition | Specified Condition |
|---|---|---|
| O10-10 (DM+R) - O13-11 (M+) (*1) | Always | Below 1 Ω |
| O12-10 (PM+R) - O14-11 (M+) (*2) | Always | Below 1 Ω |
| O10-9 (DMHR) - O13-12 (MH) (*1) | Always | Below 1 Ω |
| O12-9 (PMHR) - O14-12 (MH) (*2) | Always | Below 1 Ω |
| O10-1 (DMVR) - O13-10 (MV) (*1) | Always | Below 1 Ω |
| O12-1 (PMVR) - O14-10 (MV) (*2) | Always | Below 1 Ω |
| O10-10 (DM+R) - Body ground (*1) | Always | 10 kΩ or higher |
| O12-10 (PM+R) - Body ground (*2) | Always | 10 kΩ or higher |
| O10-9 (DMHR) - Body ground (*1) | Always | 10 kΩ or higher |
| O12-9 (PMHR) - Body ground (*2) | Always | 10 kΩ or higher |
| O10-1 (DMVR) - Body ground (*1) | Always | 10 kΩ or higher |

MI

| Terminals No. (Symbols) | Condition | Specified Condition |
|---|---|---|
| O12-1 (PMVR) - Body ground (*2) | Always | 10 kΩ or higher |

*1: LH side
*2: RH side

NG → **REPAIR OR REPLACE HARNESS OR CONNECTOR**

OK

**REPLACE OUTER MIRROR CONTROL ECU**