POWER MIRROR CONTROL SYSTEM (w/o Memory)

PARTS LOCATION

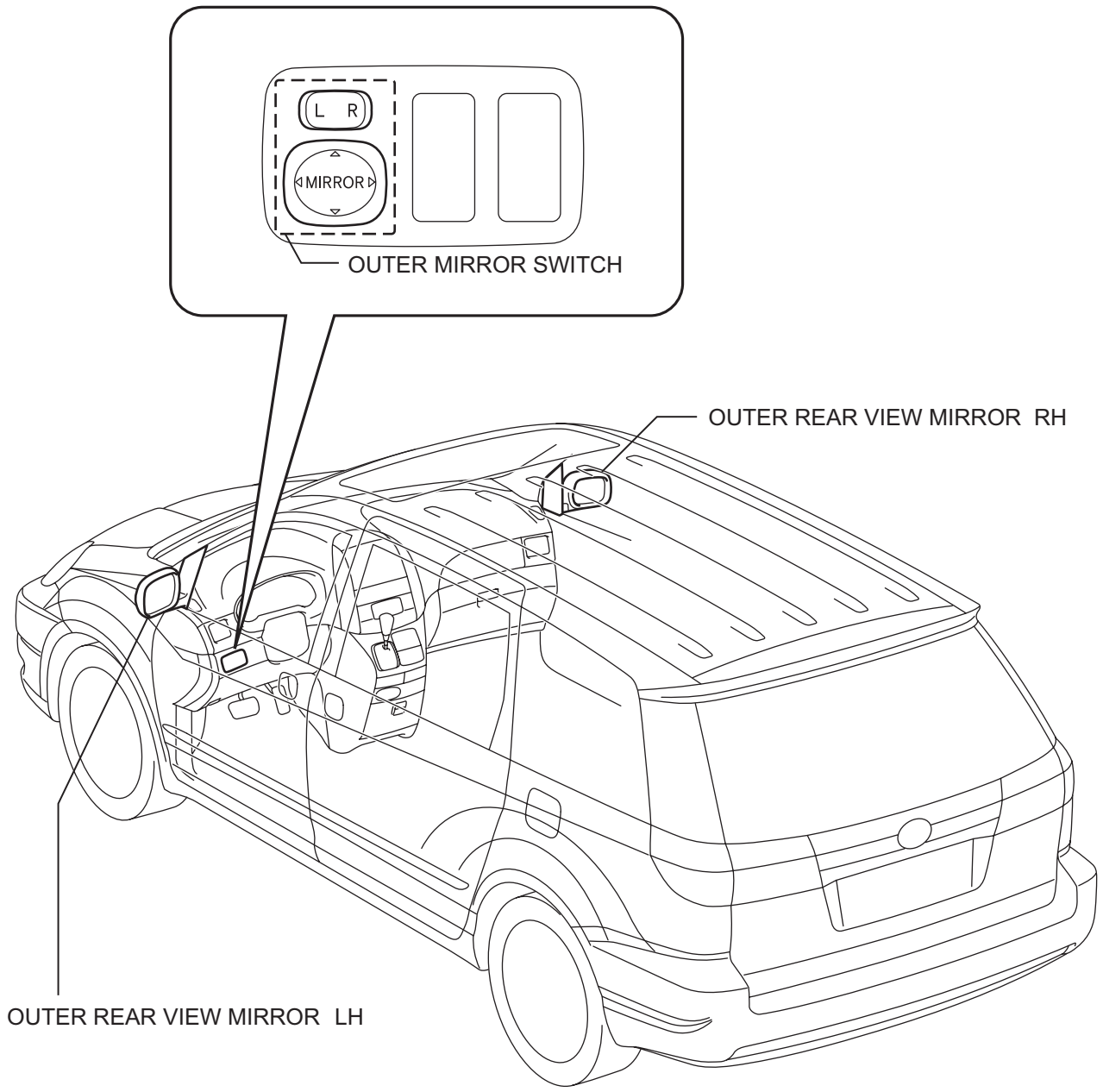

H

B120044E01

PROBLEM SYMPTOMS TABLE

POWER MIRROR CONTROL SYSTEM

Symptom	Suspected area	See page
Mirror does not operate	1. Outer mirror switch assembly	MI-46
	2. Outer rear view mirror assembly	MI-42
	3. Wire harness	-
mirror operates abnormally	1. Outer mirror switch assembly	MI-46
	2. Outer rear view mirror assembly	MI-42
	3. Wire harness	-