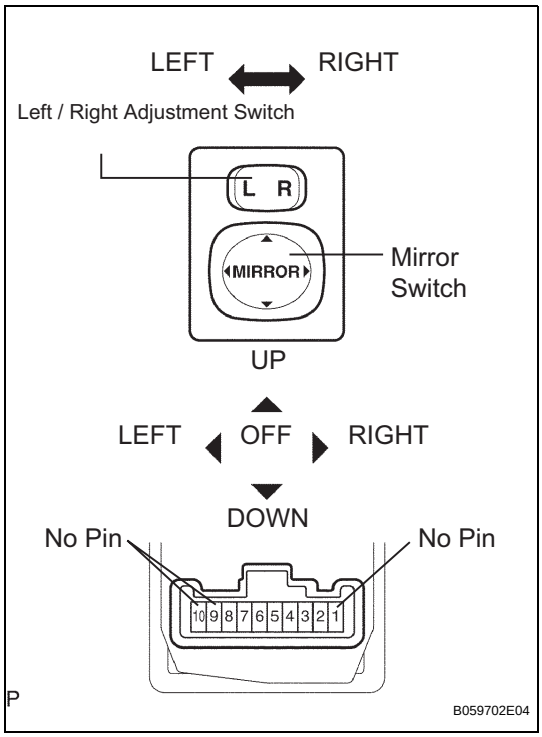

OUTER MIRROR SWITCH

INSPECTION

1. INSPECT OUTER MIRROR SWITCH ASSEMBLY (w/o Memory)

(a) The L side of the left / right adjustment switch: Inspect the mirror switch resistance.
Standard resistance (Left side)

Terminal No.	Switch Position	Specified Condition
-	OFF	10 kΩ or higher
4 - 8	UP	Below 1 Ω
6 - 7		
4 - 7	DOWN	Below 1 Ω
6 - 8		
5 - 8	LEFT	Below 1 Ω
6 - 7		
5 - 7	RIGHT	Below 1 Ω
6 - 8		

If the result is not as specified, replace the switch assembly.

(b) The R side of the left / right adjustment switch: Inspect the mirror switch resistance.
Standard resistance (Right side)

Terminal No.	Switch Position	Specified Condition
-	OFF	10 kΩ or higher
3 - 8	UP	Below 1 Ω
6 - 7		
3 - 7	DOWN	Below 1 Ω
6 - 8		
2 - 8	LEFT	Below 1 Ω
6 - 7		
2 - 7	RIGHT	Below 1 Ω
6 - 8		

If the result is not as specified, replace the switch assembly.

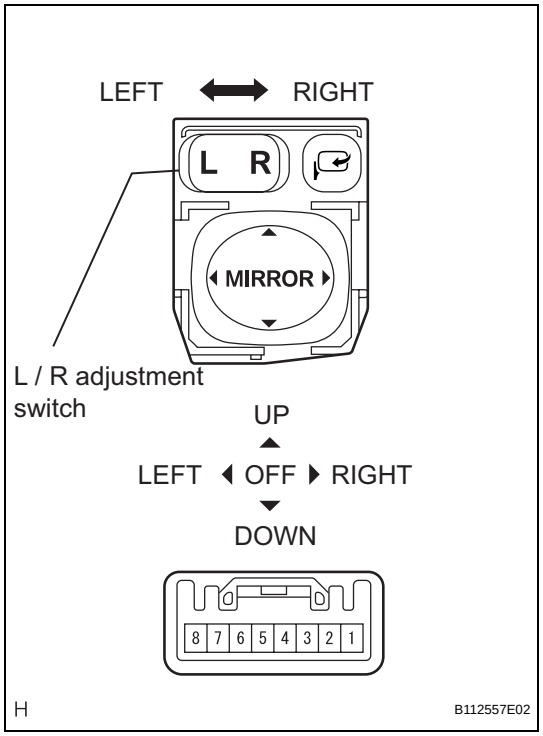

2. INSPECT OUTER MIRROR SWITCH ASSEMBLY (w/ Memory)

(a) Remove the outer mirror control switch.

(b) Measure the resistance according to the value(s) in the table below when the switch is operated.

Resistance

Tester Connection	Switch Position	Specified Condition
2 - 3	OFF	10 kΩ or higher
	UP + L or R (*1)	80 to 120 Ω
	DOWN + L or R (*1)	450 to 490 Ω
	LEFT + L or R (*1)	780 to 820 Ω
	RIGHT + L or R (*1)	230 to 270 Ω
1 - 2	L	90 to 110Ω
	R	10 Ω or less
4 - 7 6 - 8	Driving position (Unfold)	Below 1Ω
4 - 8 6 - 6	Retract position (Fold)	Below 1Ω

*1: The L or R of the left / right adjustment switch.