REASSEMBLY

1. **INSTALL INSTR PNL PASS L/DOOR AIR BAG ASSEMBLY**
2. **INSTALL INSTRUMENT PANEL WIRE NO.2**
3. **INSTALL NAVIGATION ANTENNA ASSEMBLY**
4. **INSTALL ANTENNA CORD SUB-ASSEMBLY**
5. **INSTALL INSTRUMENT PANEL BOX DOOR SUB-ASSEMBLY NO.2**
6. **INSTALL INSTRUMENT PANEL FINISH PANEL RETAINER NO.1**
7. **INSTALL INSTRUMENT FINISH PANEL RETAINER LOWER NO.2**
8. **INSTALL INSTRUMENT FINISH PANEL RETAINER LOWER**
9. **INSTALL DEFROSTER DUCT BRACKET NO.1**
10. **INSTALL INSTRUMENT CLUSTER FINISH PANEL REINFORCEMENT**
11. **INSTALL INSTRUMENT PANEL FINISH PANEL RETAINER LOWER NO.3**
12. **INSTALL SIDE DEFROSTER NOZZLE RH**
13. **INSTALL SIDE DEFROSTER NOZZLE LH**
14. **INSTALL HEATER TO REGISTER DUCT NO.3**
15. **INSTALL HEATER TO REGISTER DUCT NO.2**
16. **INSTALL HEATER TO REGISTER DUCT NO.1**
17. **INSTALL DEFROSTER NOZZLE ASSEMBLY**
18. **INSTALL SIDE DEFROSTER NOZZLE DUCT NO.2**
19. **INSTALL SIDE DEFROSTER NOZZLE DUCT NO.1**

INSTALLATION

1. **INSTALL INSTRUMENT PANEL SAFETY PAD SUB-ASSEMBLY**
   (a) Using a torque wrench, install the bolt <B>.

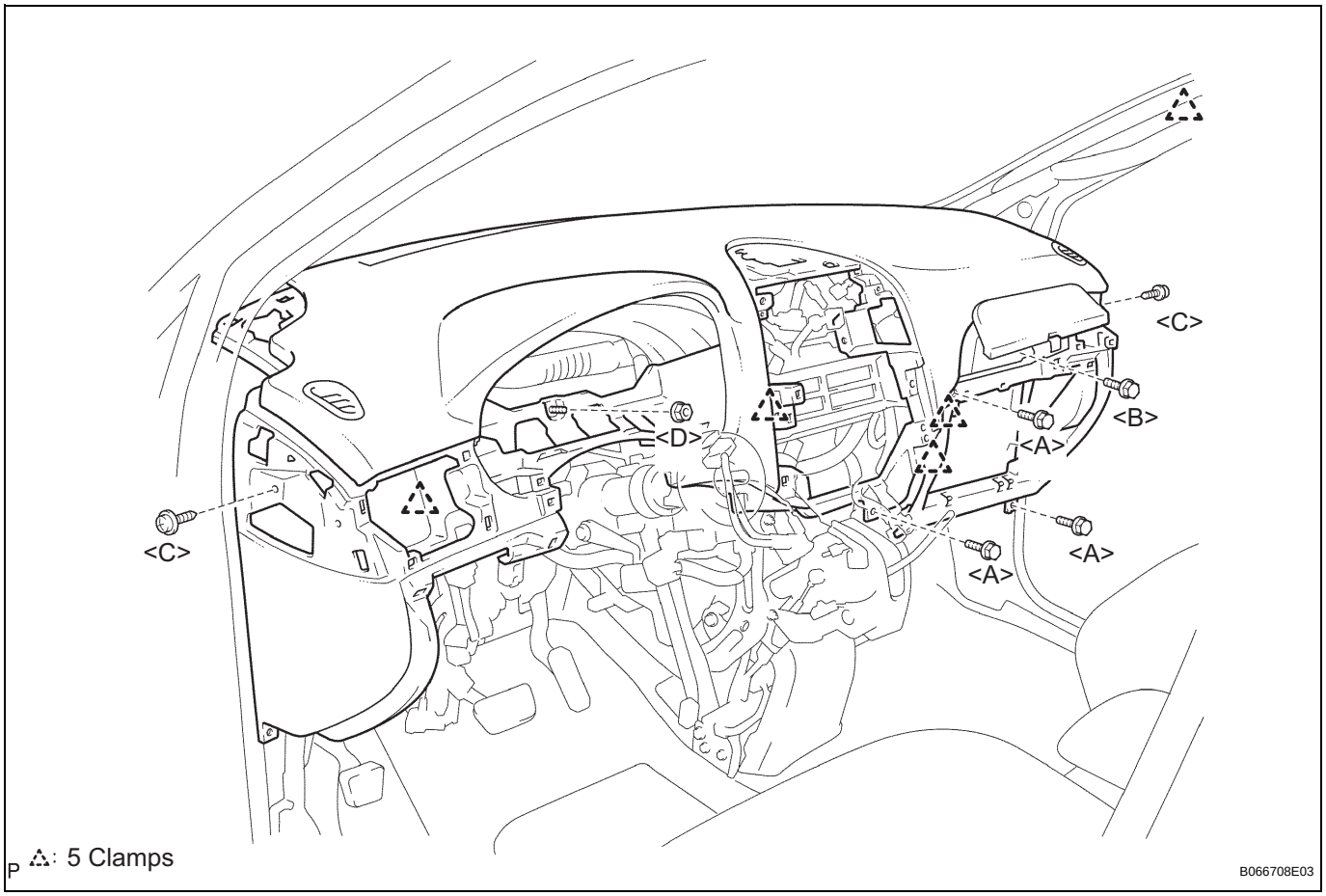

Torque: 20 N*m (204 kgf*cm, 14 ft.*lbf)

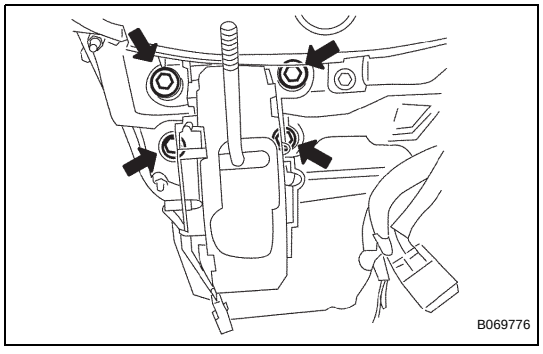

2. **INSTALL SHIFT LEVER ASSEMBLY**
   (a) Using a torque wrench, install the 4 bolts.
   Torque: 21 N*m (214 kgf*cm, 12.6 ft.*lbf)
3. **INSTALL DEFROSTER NOZZLE OPENING PLATE NO.1**
4. **INSTALL FRONT NO.2 SPEAKER ASSEMBLY**
5. **INSTALL FRONT NO.1 SPEAKER ASSEMBLY**
6. **INSTALL INSTRUMENT PANEL SPEAKER PANEL SUB-ASSEMBLY NO.2**
7. **INSTALL INSTRUMENT PANEL SPEAKER PANEL SUB-ASSEMBLY**
8. **INSTALL FRONT PILLAR GARNISH RH**
9. **INSTALL FRONT PILLAR GARNISH LH**
10. **INSTALL INTEGRATION CONTROL & PANEL ASSEMBLY**
11. **INSTALL RADIO RECEIVER ASSEMBLY**

12. **INSTALL STEREO COMPONENT SPEAKER ASSEMBLY**
13. **INSTALL INSTRUMENT CLUSTER FINISH PANEL GARNISH**
14. **INSTALL INSTRUMENT CLUSTER FINISH PANEL SUB-ASSEMBLY LOWER CENTER**
15. **INSTALL INSTRUMENT CLUSTER FINISH PANEL ASSEMBLY CENTER**
16. **INSTALL FLOOR SHIFT POSITION INDICATOR HOUSING ASSEMBLY**
17. **INSTALL SHIFT LEVER KNOB SUB-ASSEMBLY**
18. **INSTALL INSTRUMENT CLUSTER FINISH PANEL CENTER NO.2**
19. **INSTALL INSTRUMENT CLUSTER FINISH PANEL CENTER NO.1**
20. **INSTALL FLOOR CARPET COVER CENTER RH**
21. **INSTALL FLOOR CARPET COVER CENTER LH**
22. **INSTALL INSTRUMENT PANEL REGISTER ASSEMBLY NO.3**
23. **INSTALL INSTRUMENT PANEL REGISTER ASSEMBLY NO.1**
24. **INSTALL INSTRUMENT SIDE PANEL RH**
25. **INSTALL INSTRUMENT SIDE PANEL LH**
26. **INSTALL INSTRUMENT PANEL BOX NO.2**
27. **INSTALL GLOVE COMPARTMENT DOOR ASSEMBLY**
28. **INSTALL GLOVE COMPARTMENT DOOR STOPPER SUB-ASSEMBLY**
29. **INSTALL INSTRUMENT PANEL SAFETY PAD INSERT SUB-ASSEMBLY NO.1**
30. **INSTALL INSTRUMENT PANEL FINISH PANEL SUB-ASSEMBLY LOWER LH**
31. **INSTALL COWL SIDE TRIM BOARD RH**
32. **INSTALL COWL SIDE TRIM BOARD LH**
33. **INSTALL FRONT DOOR SCUFF PLATE RH**
34. **INSTALL FRONT DOOR SCUFF PLATE LH**
35. **INSTALL COMBINATION METER ASSEMBLY**
36. **INSTALL INSTRUMENT CLUSTER FINISH PANEL SUB-ASSEMBLY**
37. **INSTALL WINDSHIELD WIPER SWITCH ASSEMBLY**
38. **INSTALL HEADLIGHT DIMMER SWITCH ASSEMBLY**
39. **INSTALL SPIRAL CABLE SUB-ASSEMBLY**
40. **INSTALL STEERING COLUMN COVER**

41. **ADJUST SPIRAL CABLE SUB-ASSEMBLY (See page RS-435)**
42. **INSTALL STEERING WHEEL ASSEMBLY (See page SR-11)**
43. **INSTALL HORN BUTTON ASSEMBLY (See page RS-424)**
44. **INSTALL STEERING WHEEL COVER LOWER NO.2**
45. **INSTALL STEERING WHEEL COVER LOWER NO.3**
46. **CONNECT BATTERY NEGATIVE TERMINAL**
47. **INSPECT HORN BUTTON ASSEMBLY (See page RS-425)**
48. **INSPECT SRS WARNING LIGHT (See page RS-436)**