REMOVAL

1. **BOLT, SCREW AND NUT TABLE**
   (a) The bolts, the screws and the nuts, which are necessary for installation and removal of the instrument panel are shown in the illustration below with alphabets.

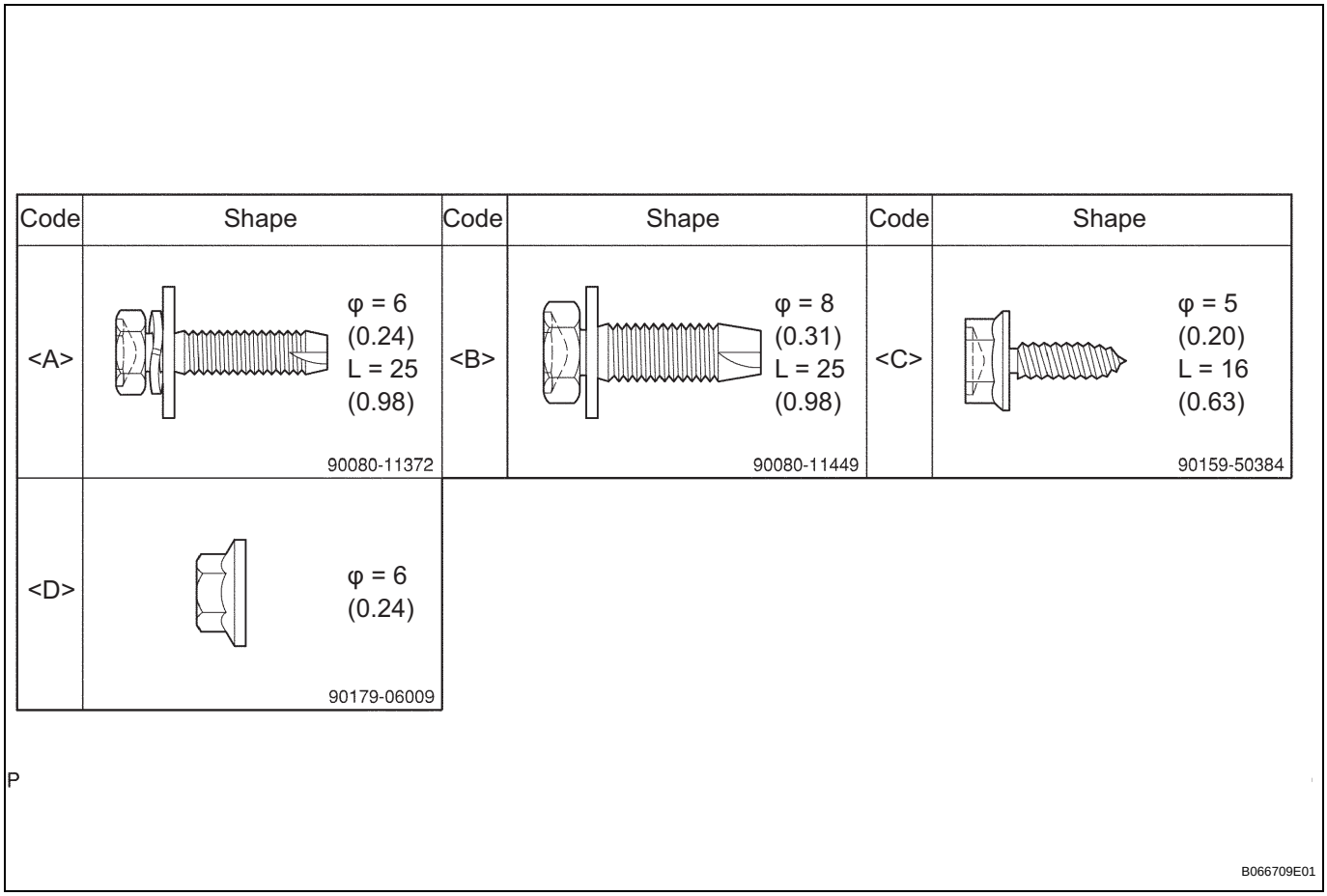

2. **DISCONNECT BATTERY NEGATIVE TERMINAL (See page RS-423)**
3. **REMOVE STEERING WHEEL COVER LOWER NO.2**
4. **REMOVE STEERING WHEEL COVER LOWER NO.3**
5. **REMOVE HORN BUTTON ASSEMBLY (See page RS-424)**
6. **REMOVE STEERING WHEEL ASSEMBLY (See page SR-6)**
7. **REMOVE STEERING COLUMN COVER (See page RS-434)**
8. **REMOVE HEADLIGHT DIMMER SWITCH ASSEMBLY (See page LI-102)**
9. **REMOVE WINDSHIELD WIPER SWITCH ASSEMBLY (See page WW-17)**

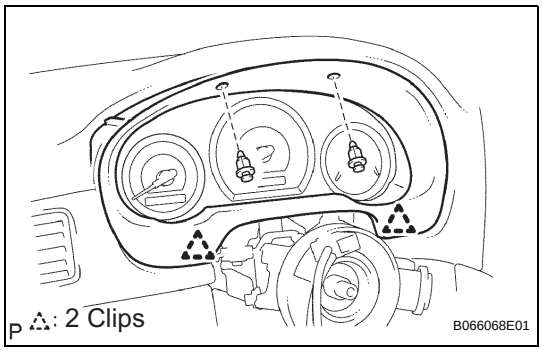

10. REMOVE INSTRUMENT CLUSTER FINISH PANEL SUB-ASSEMBLY

(a) Remove the 2 clips.

(b) Pull the instrument cluster finish panel sub-assembly rearward to remove it.

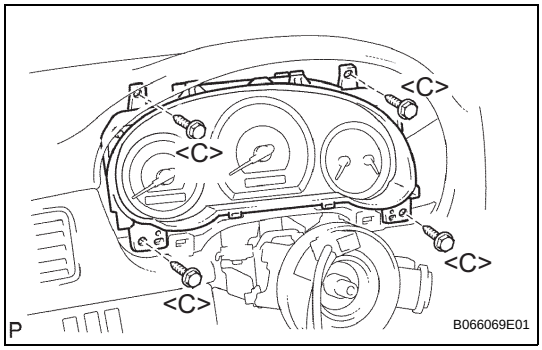

11. REMOVE COMBINATION METER ASSEMBLY

(a) Remove the 4 screws <C>.

(b) Pull out the combination meter assembly, then disconnect the connectors.

12. REMOVE FRONT DOOR SCUFF PLATE RH (See page IR-7)

13. REMOVE FRONT DOOR SCUFF PLATE LH

14. REMOVE COWL SIDE TRIM BOARD RH (See page IR-7)

15. REMOVE COWL SIDE TRIM BOARD LH

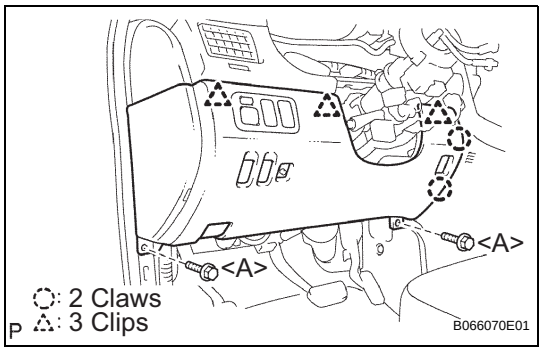

16. REMOVE INSTRUMENT PANEL FINISH PANEL SUB-ASSEMBLY LOWER LH

(a) Remove the 2 bolts <A>.

(b) Disconnect the hood lock control cable assembly.

(c) Disengage the 2 claws and 3 clips, and then remove the instrument panel finish panel sub-assembly lower LH.

(d) Disconnect the connectors.

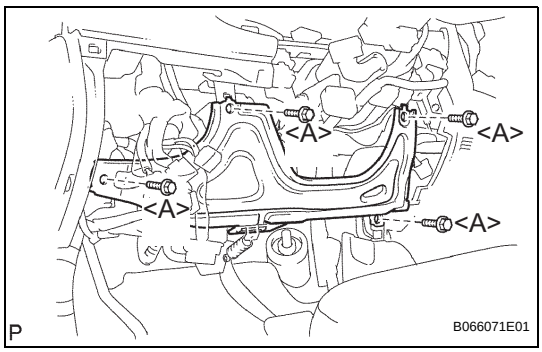

17. REMOVE INSTRUMENT PANEL SAFETY PAD INSERT SUB-ASSEMBLY NO.1

(a) Remove the 4 bolts <A> and instrument panel safety pad insert sub-assembly No. 1.

(b) Disconnect the connector.

IP

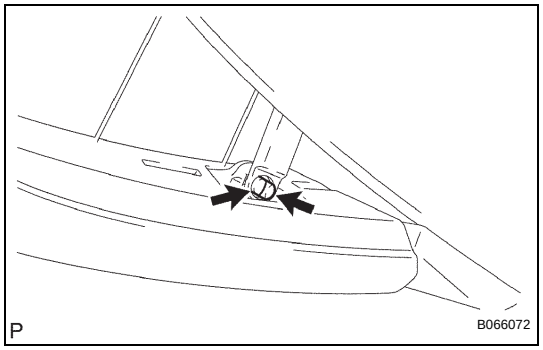

18. REMOVE GLOVE COMPARTMENT DOOR STOPPER SUB-ASSEMBLY

(a) Disengage the claw, and remove the glove compartment door stopper sub-assembly.

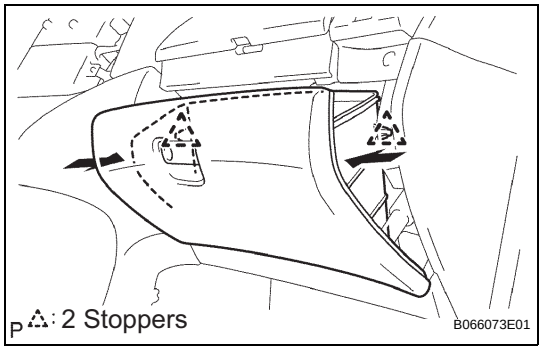

19. REMOVE GLOVE COMPARTMENT DOOR ASSEMBLY

(a) Push the right side wall and then push the left wall to release the stoppers.

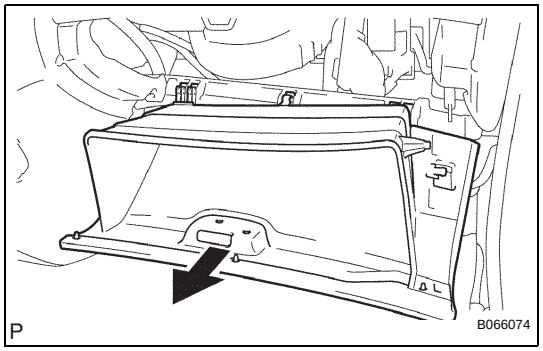

(b) Pull the glove compartment door sub-assembly rearward to remove it.

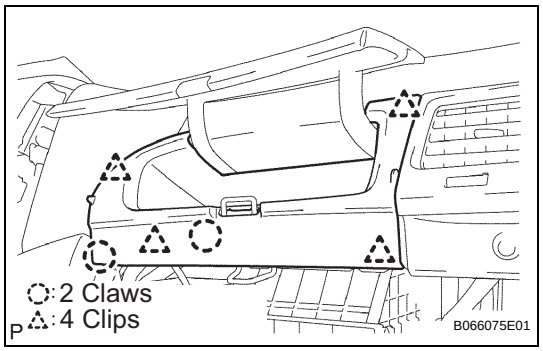

20. REMOVE INSTRUMENT PANEL BOX NO.2

(a) Disengage the 2 claws and the 4 clips, and remove the instrument panel box No. 2.

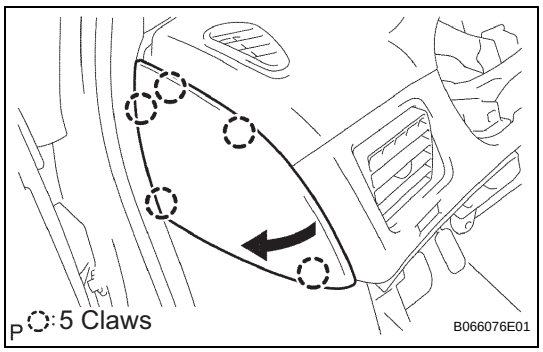

21. REMOVE INSTRUMENT SIDE PANEL LH

(a) Disengage the 5 claws by pulling up the edge of the instrument side panel LH from the rear of the vehicle.

(b) Remove the instrument side panel LH.

22. REMOVE INSTRUMENT SIDE PANEL RH

IP

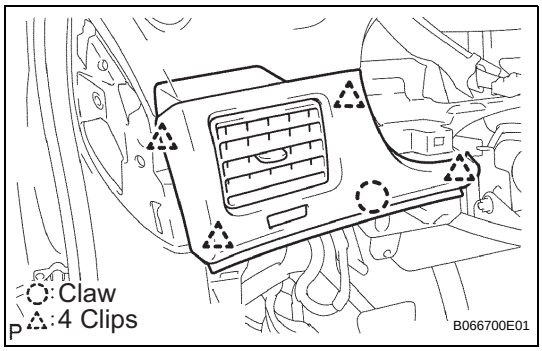

23. REMOVE INSTRUMENT PANEL REGISTER ASSEMBLY NO.1

(a) Disengage the claw and 4 clips, and then remove the instrument panel register assembly No. 1.

24. REMOVE INSTRUMENT PANEL REGISTER ASSEMBLY NO.3

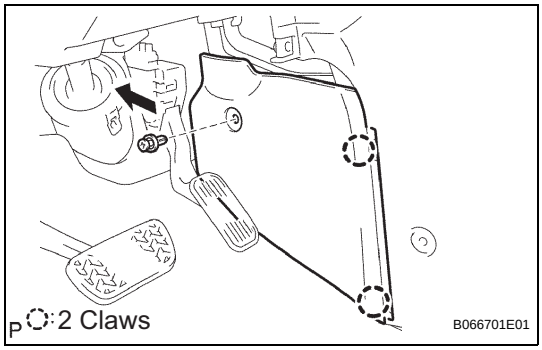

25. REMOVE FLOOR CARPET COVER CENTER LH

(a) Remove the clip on the floor carpet cover center LH.
(b) Depress the edge of the floor carpet cover center LH around the claws to disengage the two claws under beneath of the floor carpet cover center LH.
(c) Slightly sliding the floor carpet cover center LH to the front of the vehicle, detach the two claws from the instrument cluster finish panel sub-assembly lower center at the floor carpet cover center LH.
(d) Remove the floor carpet cover center LH.

26. REMOVE FLOOR CARPET COVER CENTER RH

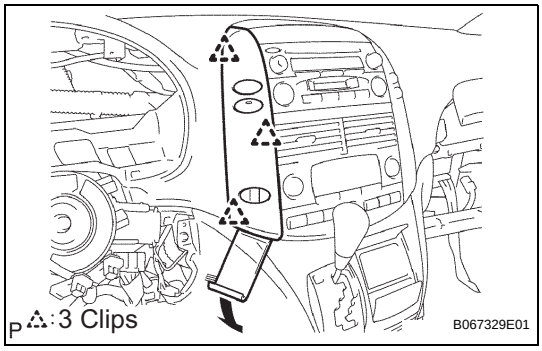

27. REMOVE INSTRUMENT CLUSTER FINISH PANEL CENTER NO.1

(a) Using a moulding remover, disengage the 3 clips as shown in the illustration.
(b) Disconnect the connector and remove the instrument cluster finish panel center No. 1.

28. REMOVE INSTRUMENT CLUSTER FINISH PANEL CENTER NO.2

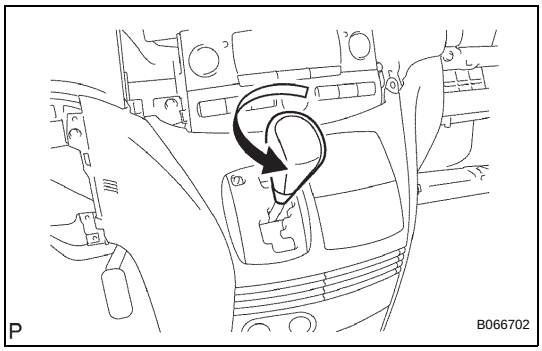

29. REMOVE SHIFT LEVER KNOB SUB-ASSEMBLY

(a) Remove the floor shift lever knob sub-assembly.

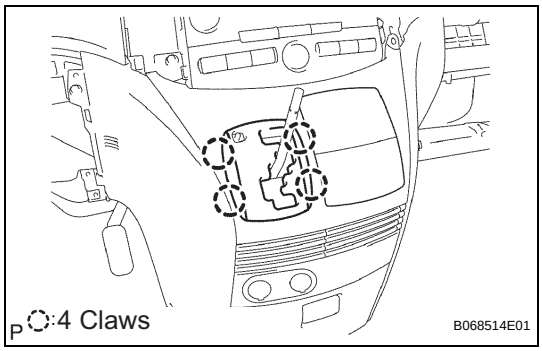

30. REMOVE FLOOR SHIFT POSITION INDICATOR HOUSING ASSEMBLY

(a) Disengage the 4 claws, and remove the floor shift position indicator housing assembly.

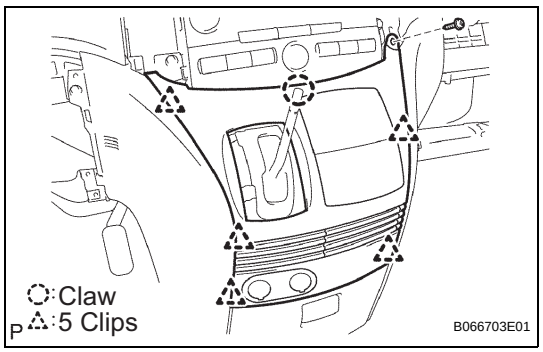

31. REMOVE INSTRUMENT CLUSTER FINISH PANEL ASSEMBLY CENTER

(a) Remove the screw <C>.
(b) Disengage the 5 clips and the claw from the lowest part on the instrument cluster finish panel assembly center in order.
(c) Disconnect the connectors at the instrument cluster finish panel sub-assembly lower center, and then remove the instrument cluster finish panel assembly center.

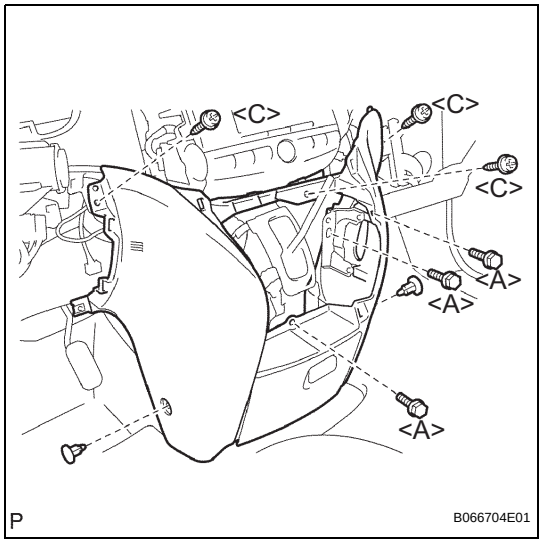

32. REMOVE INSTRUMENT CLUSTER FINISH PANEL SUB-ASSEMBLY LOWER CENTER

(a) Remove the 2 clips on both sides.
(b) Remove the 3 screws <C> and 3 bolts <A>.
(c) Pull the instrument cluster finish panel sub-assembly lower center rearward to remove it.
(d) Disconnect the connector.

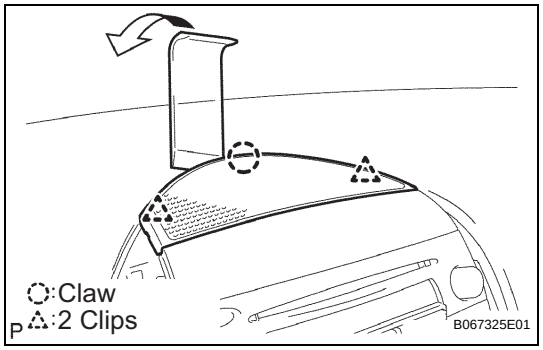

33. REMOVE INSTRUMENT CLUSTER FINISH PANEL GARNISH

(a) Insert the edge of a moulding remover between the instrument cluster finish panel garnish and the radio receiver from the top center, and then lean the moulding remover toward the front of the vehicle to raise the instrument cluster finish panel garnish.
(b) Disengage the claw on the top of the instrument cluster finish panel garnish and the two clips from the radio receiver.

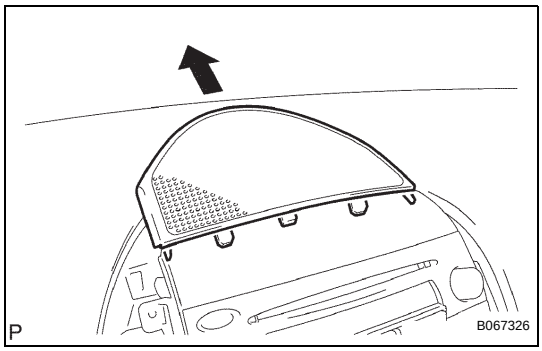

(c) Pull up the instrument cluster finish panel garnish to the front of the vehicle to disengage the 5 claws at the bottom of the instrument cluster finish panel garnish.
(d) Remove the instrument cluster finish panel garnish.

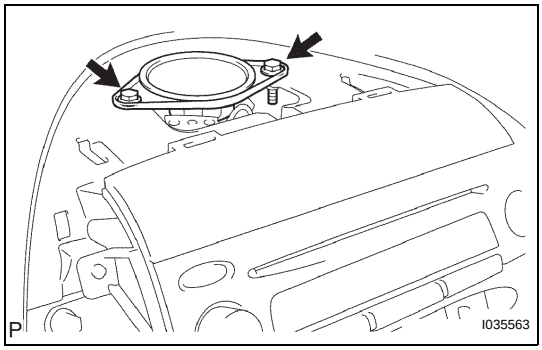

34. REMOVE STEREO COMPONENT SPEAKER ASSEMBLY
(a) Remove the 2 screws and stereo component speaker assembly.
(b) Disconnect the connector.

35. REMOVE RADIO RECEIVER ASSEMBLY

36. REMOVE INTEGRATION CONTROL AND PANEL ASSEMBLY (See page AC-255)

37. REMOVE FRONT PILLAR GARNISH RH (See page IR-10)

38. REMOVE FRONT PILLAR GARNISH LH

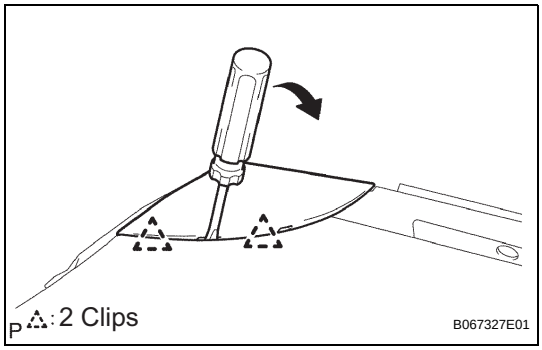

39. REMOVE INSTRUMENT PANEL SPEAKER PANEL SUB-ASSEMBLY
(a) Using a screwdriver, disengage the 2 clips and remove the instrument panel speaker panel sub-assembly.

40. REMOVE INSTRUMENT PANEL SPEAKER PANEL SUB-ASSEMBLY NO.2

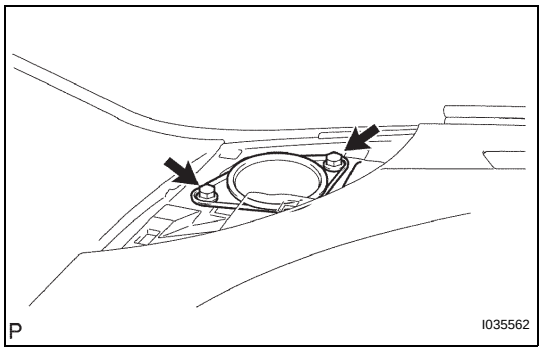

41. REMOVE FRONT NO.1 SPEAKER ASSEMBLY
(a) Remove the 2 screws and front No. 1 speaker assembly.
(b) Disconnect the connector.

42. REMOVE FRONT NO.2 SPEAKER ASSEMBLY

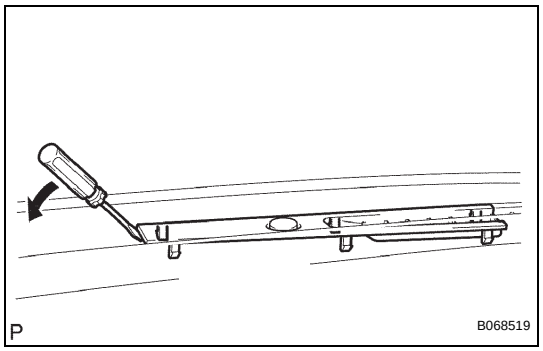

43. REMOVE DEFROSTER NOZZLE OPENING PLATE NO.1

(a) Using a screwdriver, disengage the 6 claws and remove the defroster nozzle opening plate No. 1.
(b) Disconnect the connector.

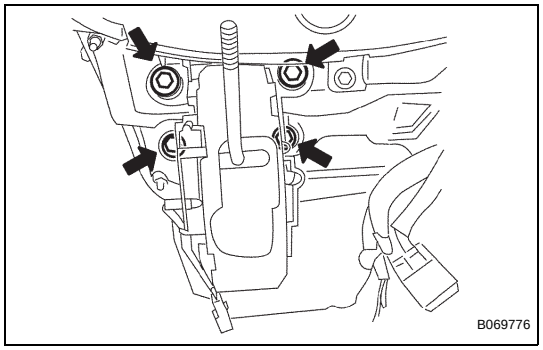

44. SEPARATE SHIFT LEVER ASSEMBLY

(a) Remove the 4 bolts and separate the shift lever assembly.

45. REMOVE INSTRUMENT PANEL SAFETY PAD SUB-ASSEMBLY

(a) Remove the 4 bolts <A> <B> and 2 screws <C> and a nut <E>.
(b) Disconnect the connectors.
(c) Remove the instrument panel sub-assembly w/ passenger airbag assembly.

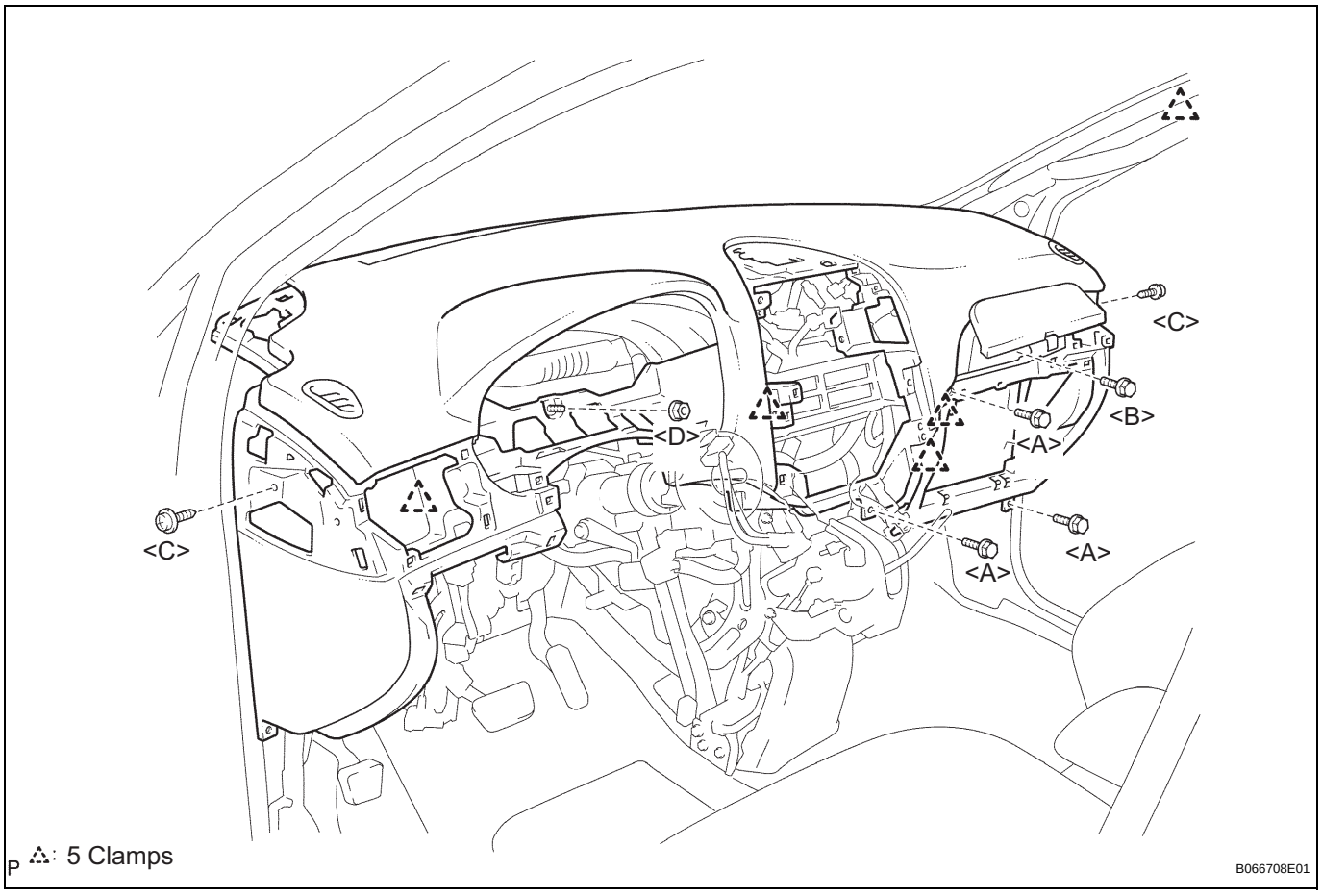

IP