Driving Position Memory Switch Circuit (w/ Memory)

DESCRIPTION

The seat memory switch sends signals to the outer mirror control ECU LH via the multiplex communication system to memorize a given seat position. This memory system does not use a position sensor. The seat position is detected by counting pulses that are output when the motor turns. If there is no pulse output from the motor, the motor will stop operating. The seat memory switch is later used to send signals to the front power seat switch to return the seat to one of the memorized positions.
The power seat memory operation can be performed only when the ignition switch is on and the shift lever is in the P position.

WIRING DIAGRAM

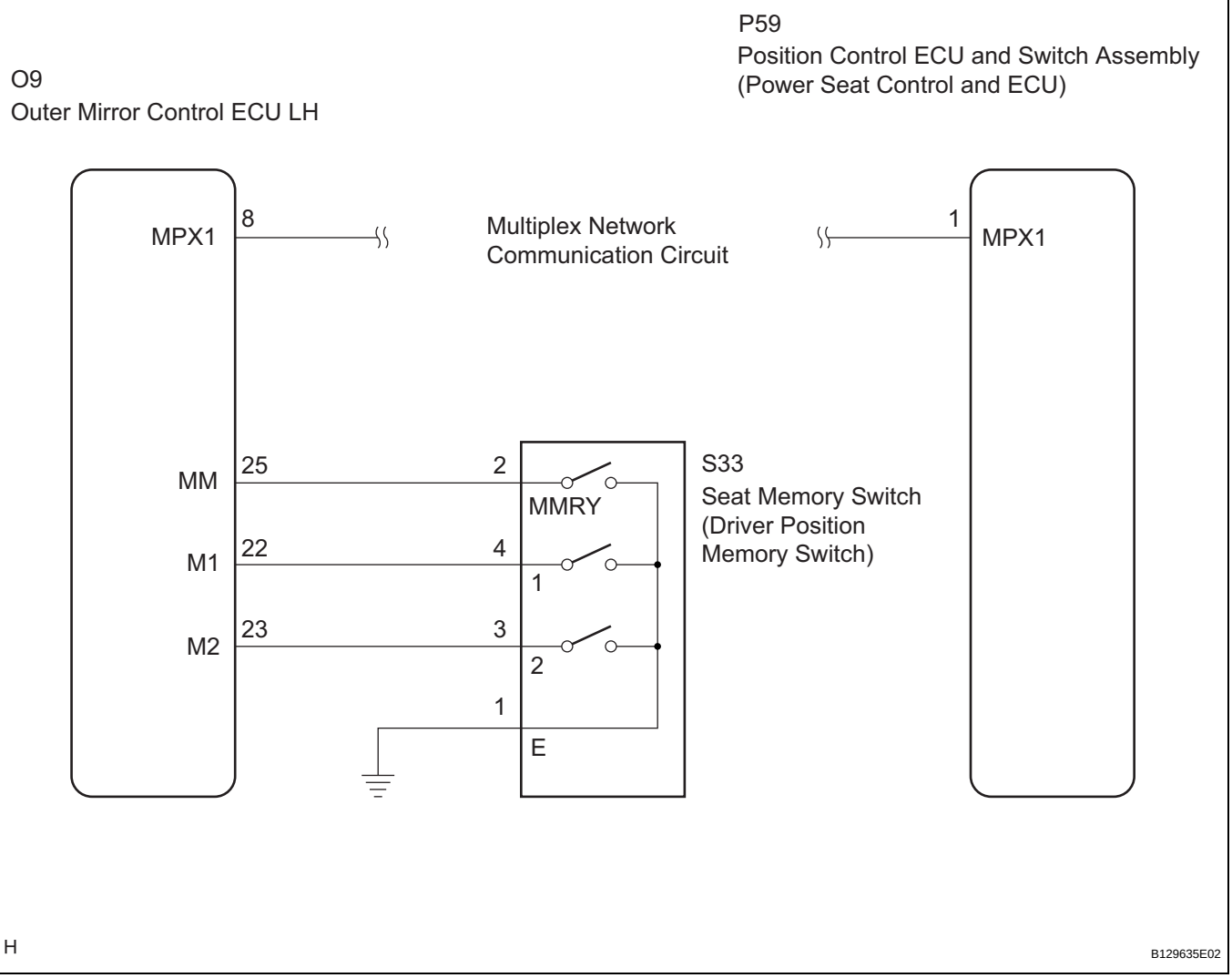

SE

INSPECTION PROCEDURE

1	READ VALUE OF INTELLIGENT TESTER

(a) Connect the intelligent tester (with CAN VIM) to the DLC3.

(b) Turn the ignition switch on.
(c) Read the DATA LIST.

D_SEAT (Position control ECU and switch assembly)

Tester Display	Measurement Item/Range	Normal Condition	Diagnostic Note
M2 SW	Seat memory M2 switch signal/ ON or OFF	ON: Seat memory M2 switch is ON OFF: Seat memory M2 switch is OFF	-
M1 SW	Seat memory M1 switch signal/ ON or OFF	ON: Seat memory M1 switch is ON OFF: Seat memory M1 switch is OFF	-
SET SW	Seat memory set switch signal/ ON or OFF	ON: Seat memory set switch is ON OFF: Seat memory set switch is OFF	-

OK:
Condition status can be displayed.

NG → **Go to step 2**

OK

PROCEED TO NEXT CIRCUIT INSPECTION SHOWN IN PROBLEM SYMPTOMS TABLE

2 INSPECT SEAT MEMORY SWITCH (DRIVING POSITION MEMORY SWITCH)

Seat Memory Switch:

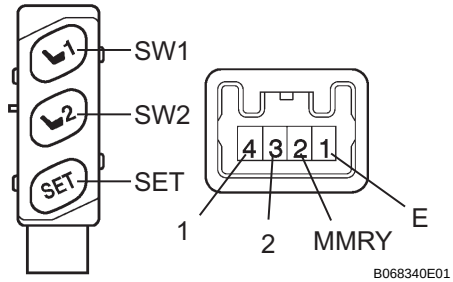

(a) Remove the seat memory switch.
(b) Measure the resistance according to the value(s) in the table below.

Standard resistance

Tester Connection	Switch Position	Specified Condition
1 (E) - 2 (MMRY)	SET switch ON (pushed)	Below 1 Ω
1 (E) - 2 (MMRY)	SET switch OFF (not pushed)	10 kΩ or higher
1 (E) - 4 (1)	SW1 switch ON (pushed)	Below 1 Ω
1 (E) - 4 (1)	SW1 switch OFF (not pushed)	10 kΩ or higher
1 (E) - 3 (2)	SW2 switch ON (pushed)	Below 1 Ω
1 (E) - 3 (2)	SW2 switch OFF (not pushed)	10 kΩ or higher

NG → **REPLACE SEAT MEMORY SWITCH (DRIVING POSITION MEMORY SWITCH)**

OK

SE

3	CHECK HARNESS AND CONNECTOR (SEAT MEMORY SWITCH CIRCUIT)

Wire Harness Rear View:

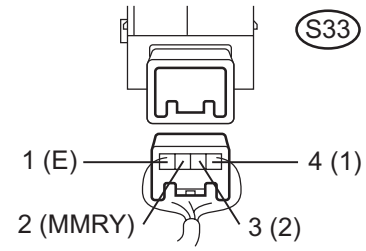

(a) Measure the voltage according to the value(s) in the table below.

Standard voltage

Tester Connection	Switch Position	Specified Condition
S33-2 (MMRY) - S33-1 (E)	Ignition switch on	10 to 14 V
S33-3 (2) - S33-1 (E)	Ignition switch on	10 to 14 V
S33-4 (1) - S33-1 (E)	Ignition switch on	10 to 14 V

NG → **Go to step 4**

OK

PROCEED TO NEXT CIRCUIT INSPECTION SHOWN IN PROBLEM SYMPTOMS TABLE

4	CHECK HARNESS AND CONNECTOR (OUTER MIRROR CONTROL ECU LH - SEAT MEMORY SWITCH)

Outer Mirror Control ECU LH Connector Wire Harness Front View:

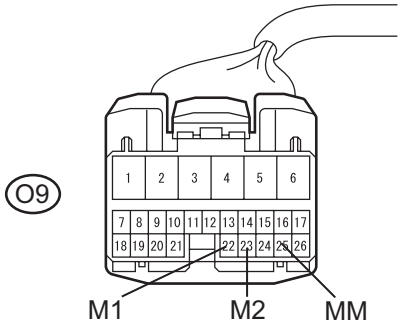

Seat Memory Switch Connector Wire Harness Rear View:

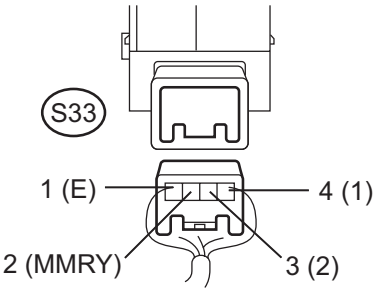

(a) Disconnect outer mirror control ECU LH connector.
(b) Measure the resistance according to the value(s) in the table below.

Standard resistance

Tester Connection	Switch Position	Specified Condition
S33-1 (E) - Body ground	Always	Below 1 Ω
S33-2 (MMRY) - O9-25 (MM)	Always	Below 1 Ω
S33-3 (2) - O9-23 (M2)	Always	Below 1 Ω
S33-4 (1) - O9-22 (M1)	Always	Below 1 Ω
S33-2 (MMRY) - Body ground	Always	10 kΩ or higher
S33-3 (2) - Body ground	Always	10 kΩ or higher
S33-4 (1) - Body ground	Always	10 kΩ or higher

NG → **REPAIR OR REPLACE HARNESS OR CONNECTOR**

SE

OK

REPLACE OUTER MIRROR CONTROL ECU LH