FRONT POWER SEAT CONTROL SYSTEM

PRECAUTION

1. GENERAL PRECAUTION

(a) When using the battery during inspection, do not bring the positive and negative tester probes too close to each other as a short circuit may occur.

PARTS LOCATION

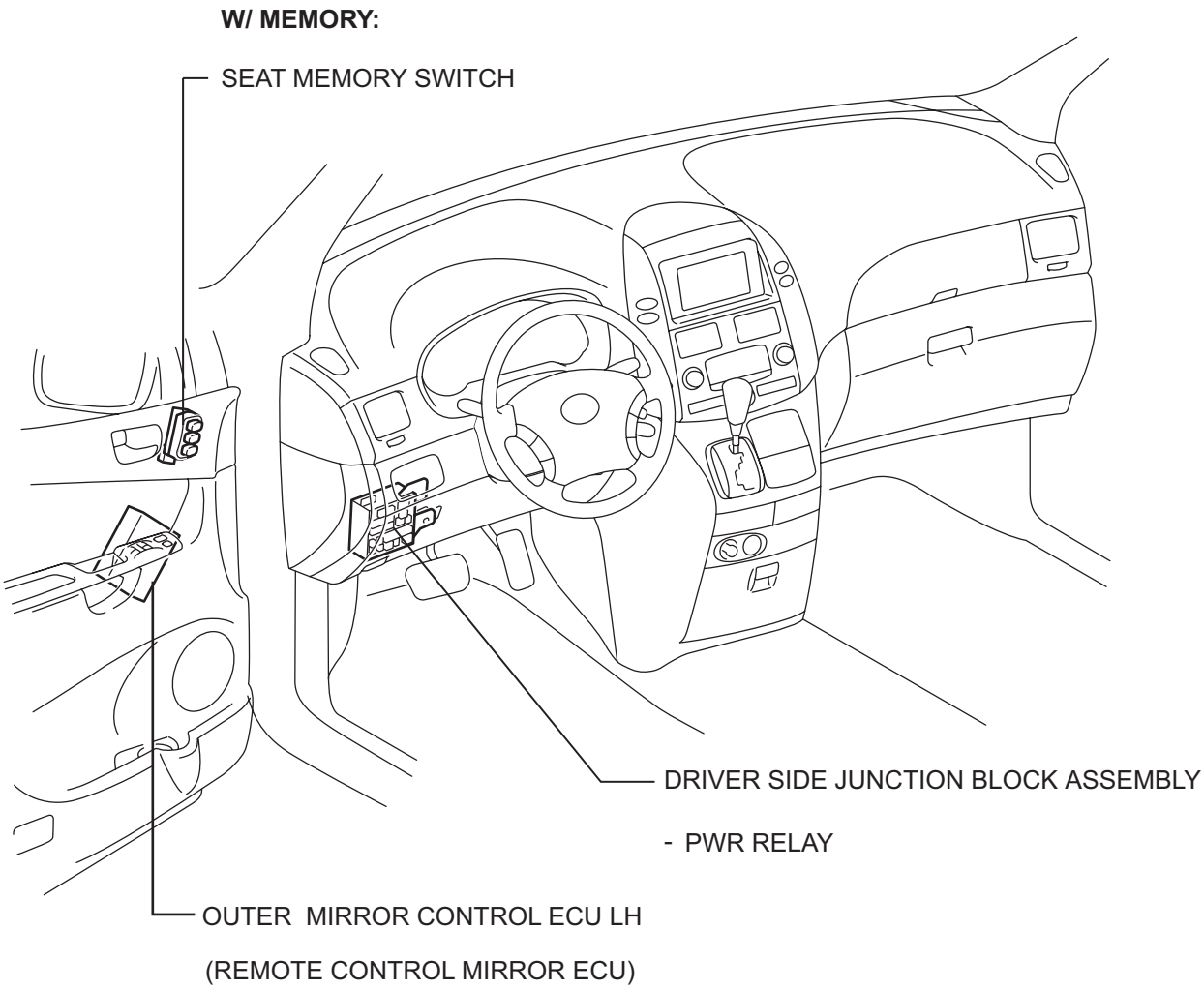

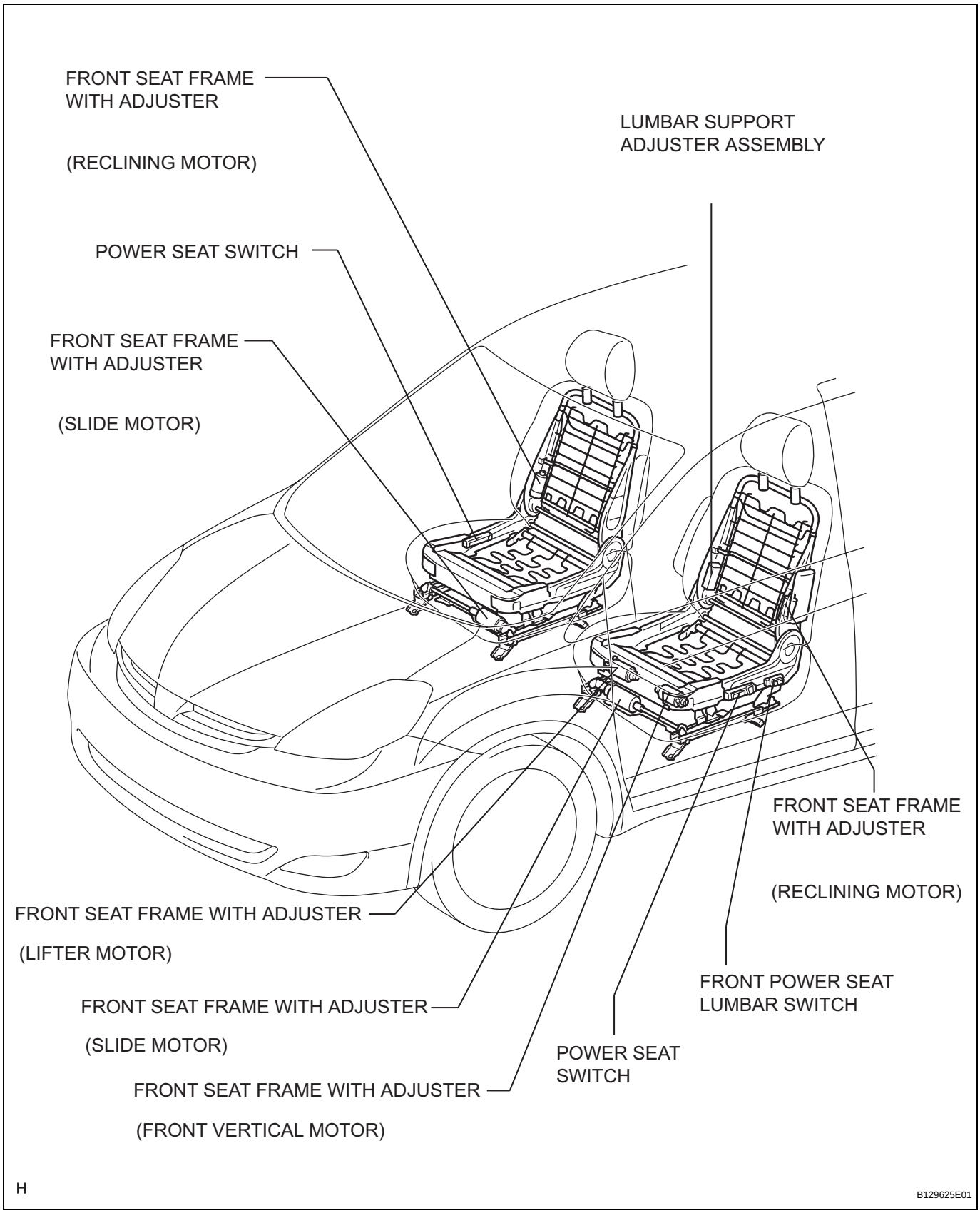
FRONT SEAT FRAME WITH ADJUSTER
(RECLINING MOTOR)
LUMBAR SUPPORT ADJUSTER ASSEMBLY
POWER SEAT SWITCH
FRONT SEAT FRAME WITH ADJUSTER
(SLIDE MOTOR)
FRONT SEAT FRAME WITH ADJUSTER
(RECLINING MOTOR)
FRONT SEAT FRAME WITH ADJUSTER
(LIFTER MOTOR)
FRONT POWER SEAT LUMBAR SWITCH
FRONT SEAT FRAME WITH ADJUSTER
(SLIDE MOTOR)
POWER SEAT SWITCH
FRONT SEAT FRAME WITH ADJUSTER
(FRONT VERTICAL MOTOR)
H
B129625E01

SE