FRONT SEAT ASSEMBLY (for Flat Type)

COMPONENTS

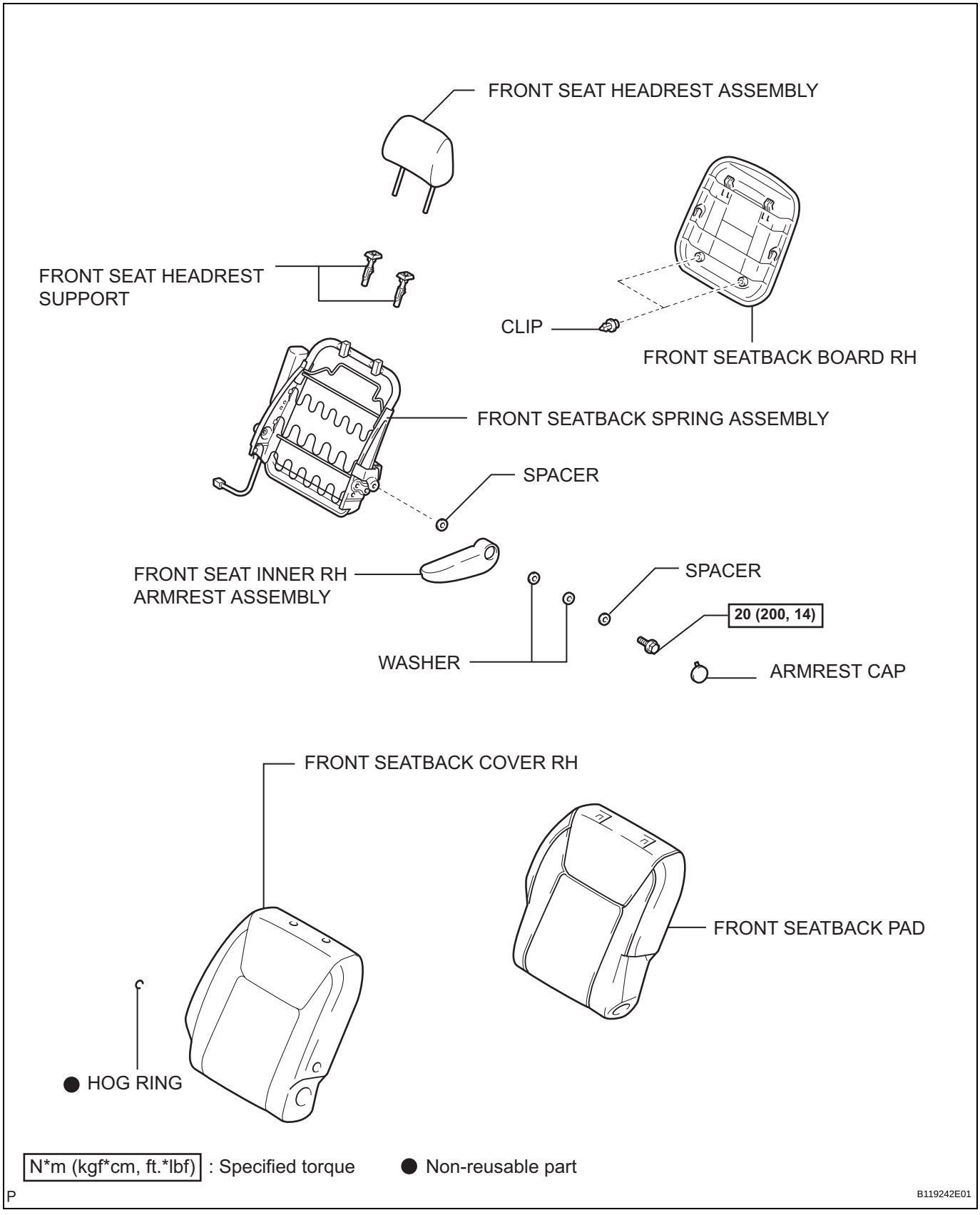

SE

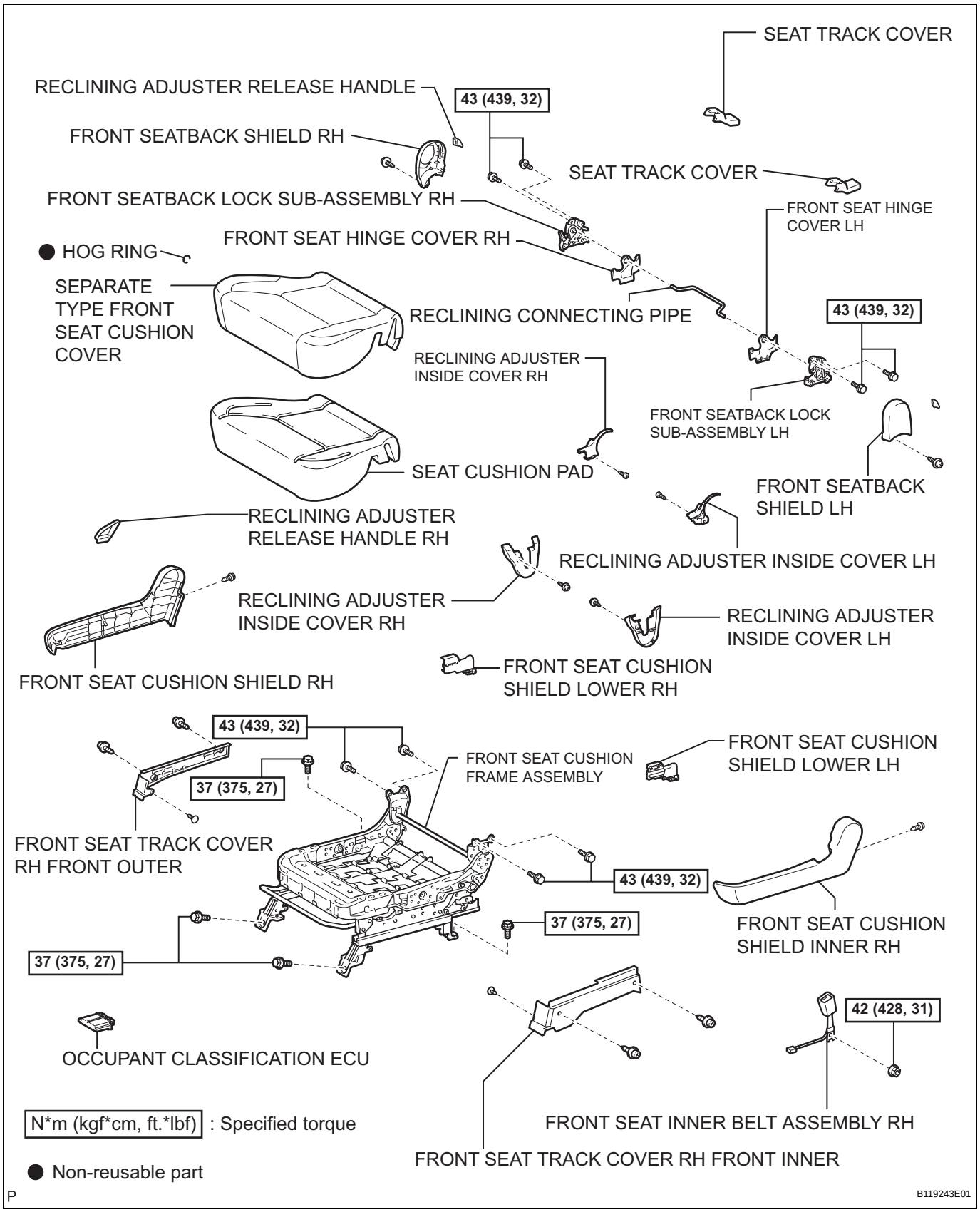
SEAT TRACK COVER
RECLINING ADJUSTER RELEASE HANDLE
43 (439, 32)
FRONT SEATBACK SHIELD RH
SEAT TRACK COVER
FRONT SEATBACK LOCK SUB-ASSEMBLY RH
FRONT SEAT HINGE COVER LH
FRONT SEAT HINGE COVER RH
● HOG RING
SEPARATE TYPE FRONT SEAT CUSHION COVER
RECLINING CONNECTING PIPE
43 (439, 32)
RECLINING ADJUSTER INSIDE COVER RH
FRONT SEATBACK LOCK SUB-ASSEMBLY LH
SEAT CUSHION PAD
FRONT SEATBACK SHIELD LH
RECLINING ADJUSTER RELEASE HANDLE RH
RECLINING ADJUSTER INSIDE COVER LH
RECLINING ADJUSTER INSIDE COVER RH
RECLINING ADJUSTER INSIDE COVER LH
FRONT SEAT CUSHION SHIELD LOWER RH
FRONT SEAT CUSHION SHIELD RH
43 (439, 32)
FRONT SEAT CUSHION FRAME ASSEMBLY
FRONT SEAT CUSHION SHIELD LOWER LH
37 (375, 27)
FRONT SEAT TRACK COVER RH FRONT OUTER
43 (439, 32)
37 (375, 27)
FRONT SEAT CUSHION SHIELD INNER RH
37 (375, 27)
42 (428, 31)
OCCUPANT CLASSIFICATION ECU
N*m (kgf*cm, ft.*lbf) : Specified torque
FRONT SEAT INNER BELT ASSEMBLY RH
FRONT SEAT TRACK COVER RH FRONT INNER
● Non-reusable part
P
B119243E01

SE