REMOVAL

CAUTION:

- **Wear safety gloves, because the sharp surfaces of the seatback frame and seat adjuster may injure your hand.**
- **Work must be started more than 90 seconds after the ignition switch is turned to the LOCK position and the negative (-) terminal cable is disconnected from the battery.**
  (The SRS is equipped with a back-up power source. If work is stated within 90 seconds from disconnecting the negative (-) terminal cable of the battery, the SRS may deploy.)

HINT:
Use the same procedures for the RH side and LH side.

1. REMOVE FRONT SEAT HEADREST ASSEMBLY

2. REMOVE FRONT SEAT ASSEMBLY LH

(a) Using a screwdriver, pry out the 2 seat track covers.
HINT:
Tape the screwdriver tip before use.

(b) Disconnect the connectors under the seat assembly.

(c) Remove the 4 bolts and the seat assembly.
NOTICE:
Be careful not to damage the body.

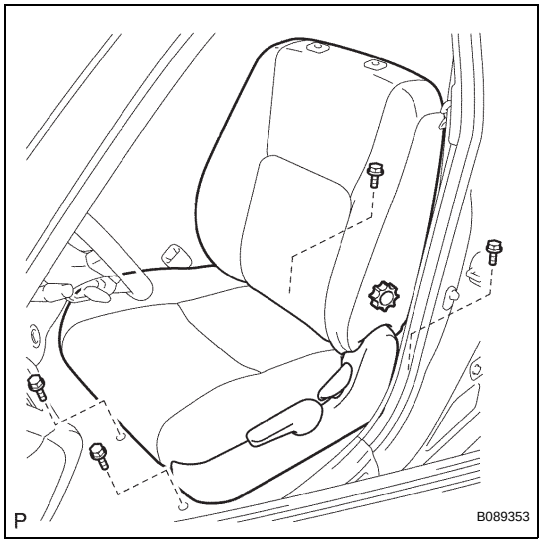

DISASSEMBLY

1. **REMOVE FRONT SEAT SIDE TABLE LEG COVER (w/ Table)**
   (a) Using a screwdriver, disengage the claws and remove the seat side table leg cover.
   HINT:
   Tape the screwdriver tip before use.

2. **REMOVE FRONT SEAT SIDE TABLE (w/ Table)**
   (a) Remove the 4 nuts and seat side table.
   (b) Remove the 2 clips and seat side table cover.

3. **REMOVE OCCUPANT CLASSIFICATION ECU (for Front Passenger Seat) (See page RS-487)**

4. **REMOVE VERTICAL SEAT ADJUSTER KNOB (for Driver Seat)**
   (a) Using a scraper, disengage the claws and remove the vertical seat adjuster knob cover.
   HINT:
   Tape the screwdriver tip before use.
   (b) Remove the screw and the vertical seat adjuster knob.

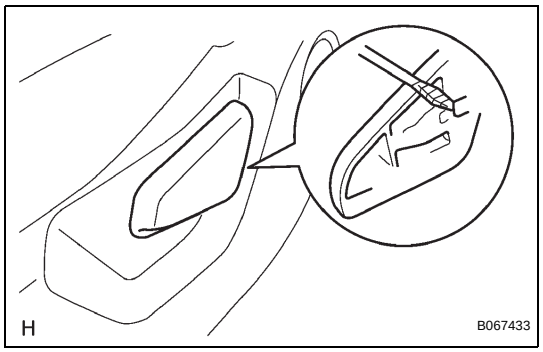

5. **REMOVE RECLINING ADJUSTER RELEASE HANDLE LH**
   (a) Using a screwdriver, disengage the claws and remove the reclining adjuster release handle.
   HINT:
   Tape the screwdriver tip before use.

6. **REMOVE FRONT SEAT CUSHION SHIELD LH**
   (a) Remove the screw.
   (b) Using a screwdriver, disengage the claws and remove the cushion shield.
   HINT:
   Tape the screwdriver tip before use.

7. **REMOVE FRONT SEAT INNER BELT ASSEMBLY LH**
   (a) Disconnect the connectors.
   (b) Remove the nut and inner belt assembly.

8. **REMOVE FRONT SEAT CUSHION SHIELD INNER LH**
   (a) Remove the screw.
   (b) Using a screwdriver, disengage the claws and remove the cushion shield.
   HINT:
   Tape the screwdriver tip before use.

9. **REMOVE FRONT SEAT TRACK COVER LH FRONT OUTER**
   (a) Remove the clip, 2 screws and seat track cover front outer.

10. **REMOVE FRONT SEAT TRACK COVER LH FRONT INNER**
    (a) Remove the clip, 2 screws and seat track cover front inner.

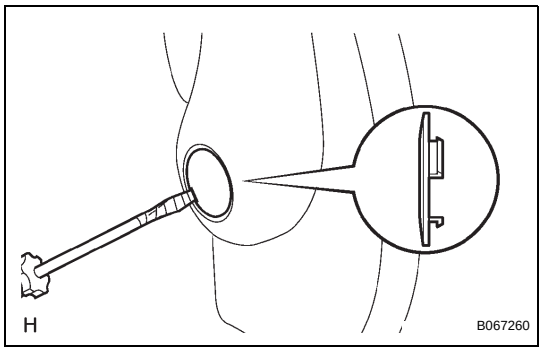

11. REMOVE FRONT SEAT INNER LH ARMREST ASSEMBLY

(a) Using a screwdriver, remove the armrest cap.
HINT:
Tape the screwdriver tip before use.
(b) Remove the bolt and armrest.
(c) Remove the 2 washers and 2 spacers.

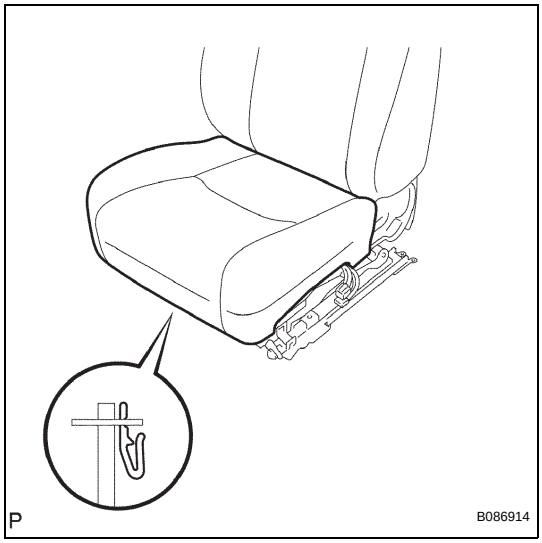

12. REMOVE SEAT CUSHION COVER WITH PAD

(a) Disengage the clamps and hooks.
(b) Disengage the hooks and remove the seat cushion cover with pad.

13. REMOVE SEPARATE TYPE FRONT SEAT CUSHION COVER

(a) Remove the hog rings and the separate type front seat cushion cover.

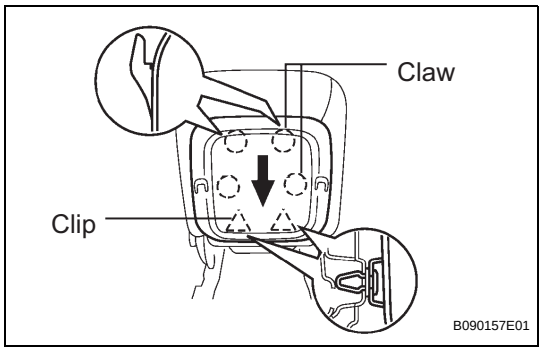

14. REMOVE FRONT SEATBACK BOARD LH

(a) Disengage the clips.
(b) Remove the seatback board by pulling it out in the arrow mark direction shown in the illustration.

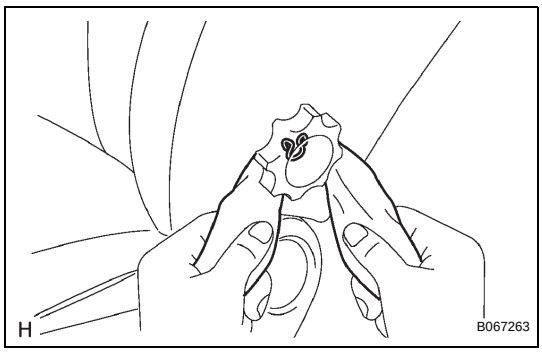

15. REMOVE LUMBAR SUPPORT KNOB LH (for Driver Seat)

(a) Using a shop rag, remove the snap ring and lumbar support knob.

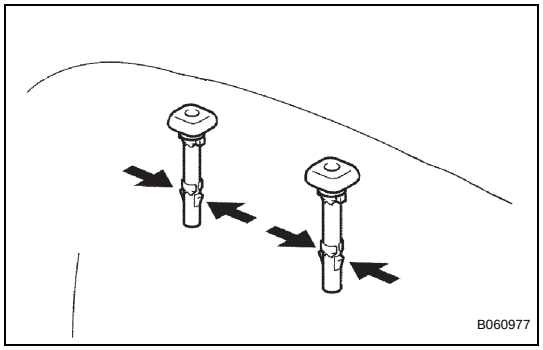

16. REMOVE FRONT SEAT HEADREST SUPPORT

(a) Disengage the claw and remove the 2 headrest supports.

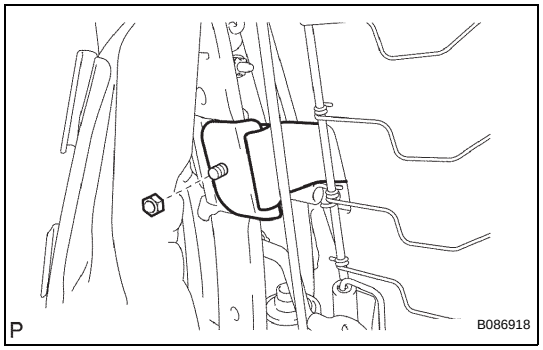

17. REMOVE SEATBACK COVER WITH PAD

(a) with Side airbag:
Remove the nut and disengage the separate type front seatback cover bracket.

(b) Remove the hog rings and disengage the hooks.

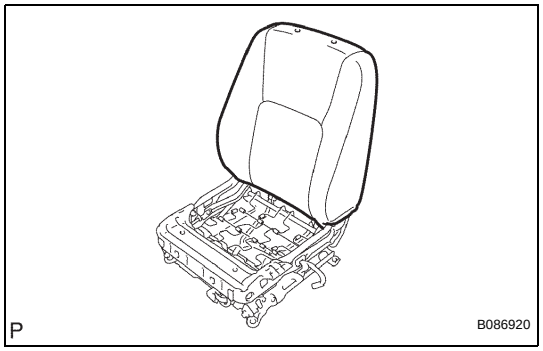

(c) Remove the seatback cover with pad.

18. REMOVE FRONT SEATBACK COVER LH

(a) Remove the hog rings and the front seatback cover.

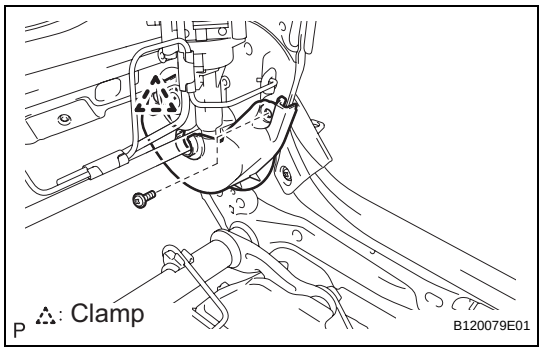

19. REMOVE RECLINING ADJUSTER INSIDE COVER LH

(a) Disengage the clamp.

(b) Remove the screw and the reclining adjuster inside cover LH (lower).

20. REMOVE RECLINING ADJUSTER INSIDE COVER RH

HINT:
Use the same procedures for the RH side and LH side.

SE

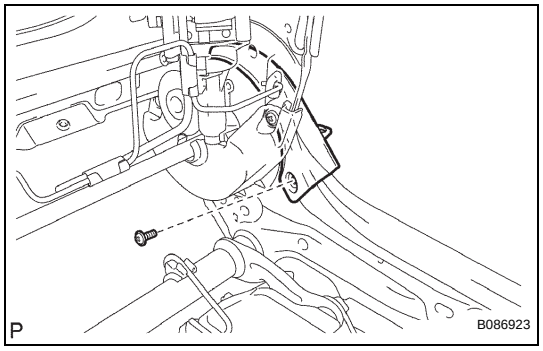

21. REMOVE RECLINING ADJUSTER INSIDE COVER LH

(a) Remove the screw and the reclining adjuster inside cover LH (upper).

22. REMOVE RECLINING ADJUSTER INSIDE COVER RH

HINT:
Use the same procedures for the RH side and LH side.

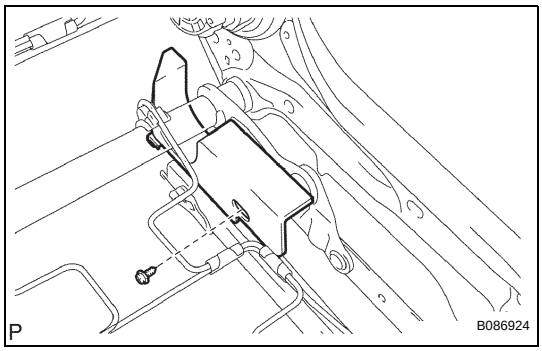

23. REMOVE FRONT SEAT CUSHION SHIELD LOWER LH

(a) Remove the screw and the front seat cushion shield lower LH.

24. REMOVE FRONT SEAT CUSHION SHIELD LOWER RH

HINT:

Use the same procedures for the RH side and LH side.

25. REMOVE SEAT POSITION AIRBAG SENSOR (for Driver Seat) (See page RS-482)

REASSEMBLY

1. **INSTALL SEAT POSITION AIRBAG SENSOR (for Driver Seat) (See page RS-483)**

2. **INSTALL FRONT SEAT CUSHION SHIELD LOWER LH**
   (a) Install the front seat cushion shield lower LH with the screw.

3. **INSTALL FRONT SEAT CUSHION SHIELD LOWER RH**
   HINT:
   Use the same procedures for the RH side and LH side.

4. **INSTALL RECLINING ADJUSTER INSIDE COVER LH**
   (a) Install the reclining adjuster inside cover LH (upper) with the screw.

5. **INSTALL RECLINING ADJUSTER INSIDE COVER RH**
   HINT:
   Use the same procedures for the RH side and LH side.

6. **INSTALL RECLINING ADJUSTER INSIDE COVER LH**
   (a) Install the reclining adjuster inside cover LH (lower) with the screw.
   (b) Install the clamp.

7. **INSTALL RECLINING ADJUSTER INSIDE COVER RH**
   HINT:
   Use the same procedures for the RH side and LH side.

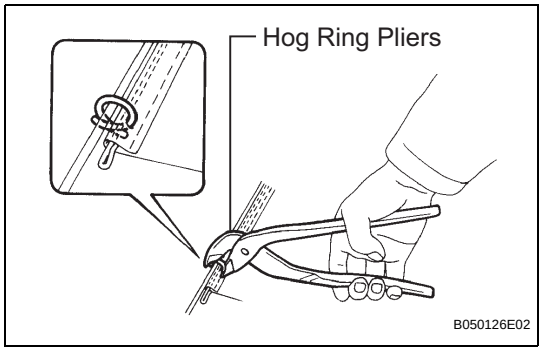

8. **INSTALL FRONT SEATBACK COVER LH**
   (a) Install the seatback pad.
   (b) Cover the top of the seatback pad with the seatback cover.
   (c) Using hog ring pliers, completely install the seatback cover with new hog rings.
   NOTICE:
   - **Be careful not to damage the cover.**
   - **When installing the hog rings, take care to prevent wrinkles as much as possible.**

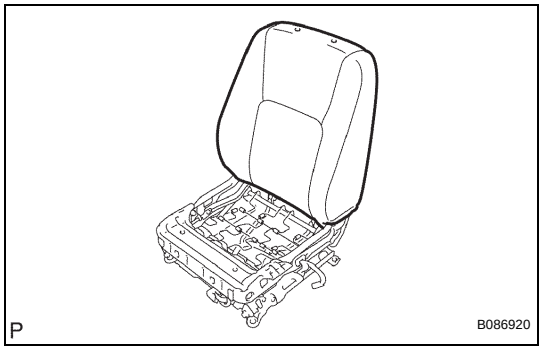

9. **INSTALL SEATBACK COVER WITH PAD**
   (a) Install the seatback cover with pad.

SE

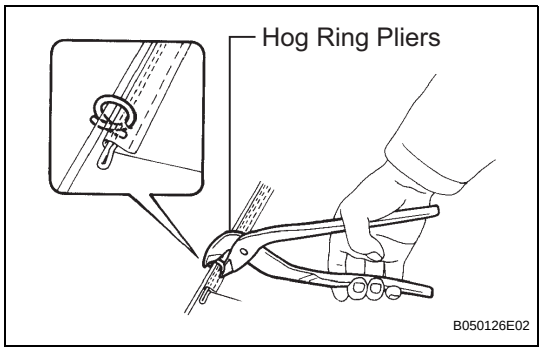

(b) Using hog ring pliers, install new hog rings and hooks.
NOTICE:
- **Be careful not to damage the cover.**
- **When installing the hog rings, take care to minimize wrinkles as much as possible.**

(c) with Side airbag:
Install the seatback cover bracket with the nut.
Torque: 5.5 N*m (56 kgf*cm, 48 in.*lbf)
NOTICE:
- **For a vehicle with side airbag, the side airbag may not be activated normally unless the seatback cover is securely installed.**
- **Check that the strap has no twist after installing the bracket.**

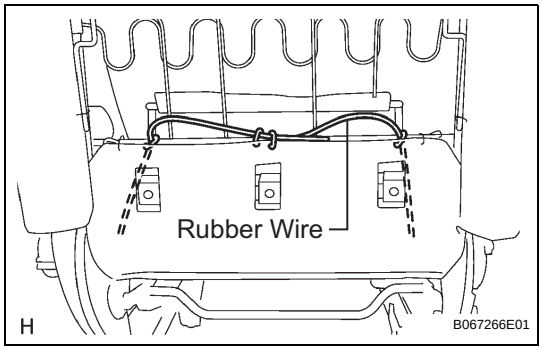

(d) Engage the rubber wire with a hole of the front seatback frame with new hog rings, as shown in the illustration.

(e) Using hog ring pliers, install new hog rings.
NOTICE:
- **Be careful not to damage the cover.**
- **When installing the hog rings, take care to prevent wrinkles as much as possible.**

10. INSTALL FRONT SEAT HEADREST SUPPORT
(a) Install the 2 headrest supports.

11. INSTALL LUMBAR SUPPORT KNOB LH (for Driver Seat)
(a) Install the lumbar support knob with the snap ring.

12. INSTALL FRONT SEATBACK BOARD LH
(a) Install the seatback board LH.

13. INSTALL SEAT CUSHION COVER WITH PAD
(a) Install the seat cushion cover with pad.
(b) Install the clamps and hooks.

14. INSTALL FRONT SEAT INNER LH ARMREST ASSEMBLY
(a) Install the armrest with the bolt.
Torque: 20 N*m (200 kgf*cm, 14 ft.*lbf)
(b) Install the seat armrest cap.

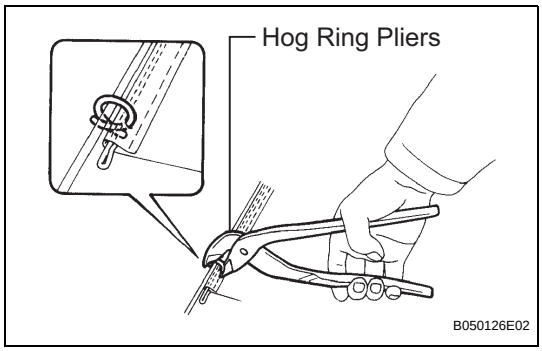

15. INSTALL SEPARATE TYPE FRONT SEAT CUSHION COVER
(a) Install the seat cushion pad to the seat cushion cover.
(b) Using hog ring pliers, install the seat cushion cover to the seat cushion pad with new hog rings.
NOTICE:
- **Be careful not to damage the cover.**
- **When installing the hog rings, take care to prevent wrinkles as much as possible.**

16. **INSTALL FRONT SEAT TRACK COVER LH FRONT INNER**
    (a) Install the seat track cover LH front inner with the clip and 2 screws.

17. **INSTALL FRONT SEAT TRACK COVER LH FRONT OUTER**
    (a) Install the seat track cover LH front outer with the clip and 2 screws.

18. **INSTALL FRONT SEAT CUSHION SHIELD INNER LH**
    (a) Install the cushion shield.
    (b) Install the screw.

19. **INSTALL FRONT SEAT INNER BELT ASSEMBLY LH**
    (a) Install the inner belt assembly with the nut.
    Torque: 41 N*m (418 kgf*cm, 30 ft.*lbf)
    HINT:
    Check that the inner seat belt assembly moves smoothly.
    (b) Connect the connectors.

20. **INSTALL FRONT SEAT CUSHION SHIELD LH**
    (a) Install the front seat cushion shield LH.
    (b) Install the screw.

21. **INSTALL RECLINING ADJUSTER RELEASE HANDLE LH**
    (a) Install the reclining adjuster release handle LH.

22. **INSTALL VERTICAL SEAT ADJUSTER KNOB (for Driver Seat)**
    (a) Install the vertical seat adjuster knob with the screw.
    (b) Install the vertical seat adjuster knob cover.

23. **INSTALL OCCUPANT CLASSIFICATION ECU (for Front Passenger Seat) (See page RS-488)**

24. **INSTALL FRONT SEAT SIDE TABLE (w/ Table)**
    (a) Install the seat side table with 4 nuts.
    Torque: 13 N*m (133 kgf*cm, 10 ft.*lbf)

25. **INSTALL FRONT SEAT SIDE TABLE LEG COVER (w/ Table)**
    (a) Install the front seat side table leg cover.