REMOVAL

NOTICE:

- **Always wear safety gloves because the edges of the seatback frame and seat adjuster are sharp and may cause injury.**
- **Work must be started more than 90 seconds after the ignition switch is turned to the LOCK position and the negative (-) terminal cable is disconnected from the battery.**
  (The SRS is equipped with a back-up power source. If work is started within 90 seconds from disconnecting the negative (-) terminal cable of the battery, the SRS may deploy.)

HINT:
Use the same procedures for the RH side and LH side.

1. REMOVE FRONT SEAT HEADREST ASSEMBLY

2. REMOVE FRONT SEAT ASSEMBLY LH

(a) Using a screwdriver, pry out the 2 seat track covers.
HINT:
Tape the screwdriver tip before use.

(b) Disconnect the connectors under the seat.

(c) Remove the 4 bolts and the seat assembly.
NOTICE:
Be careful not to damage the body.

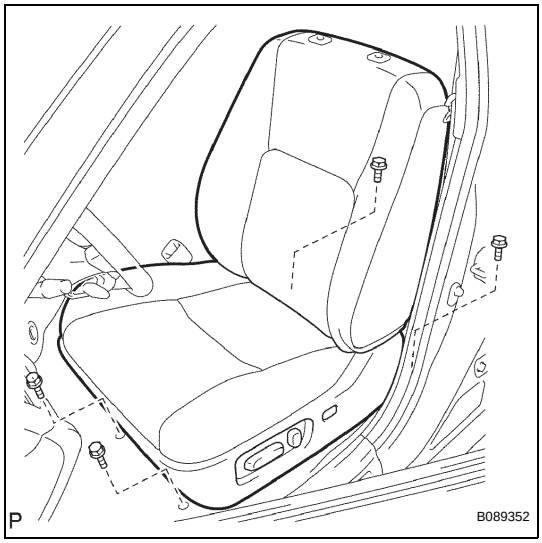

DISASSEMBLY

1. **REMOVE FRONT SEAT SIDE TABLE LEG COVER (w/ Table)**
   (a) Using a screwdriver, disengage the claws and remove the seat side table leg cover.
   HINT:
   Tape the screwdriver tip before use.

2. **REMOVE FRONT SEAT SIDE TABLE (w/ Table)**
   (a) Remove the 4 nuts and seat side table.
   (b) Remove the 2 clips and seat side table cover.

3. **REMOVE OCCUPANT CLASSIFICATION ECU (for Front Passenger Seat) (See page RS-487)**

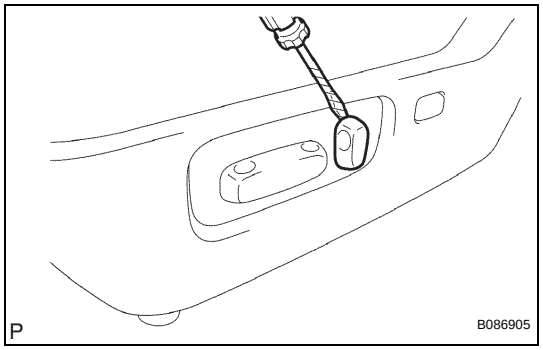

4. **REMOVE RECLINING POWER SEAT SWITCH KNOB**
   (a) Using a screwdriver, remove the reclining power seat switch knob.
   HINT:
   Tape up the screwdriver tip before.

5. **REMOVE SLIDE & VERTICAL POWER SEAT SWITCH KNOB**
   (a) Using a screwdriver, remove the slide & vertical power seat switch knob.
   HINT:
   Tape up the screwdriver tip before.

6. **REMOVE FRONT SEAT CUSHION SHIELD INNER LH**
   (a) Remove the 7 screws.
   (b) Using a screwdriver, disengage the 4 claws and clip, and remove the front seat cushion shield LH together with the front seat cushion shield inner LH and front seat cushion shield inner No. 1 LH.
   HINT:
   Tape the screwdriver tip before use.

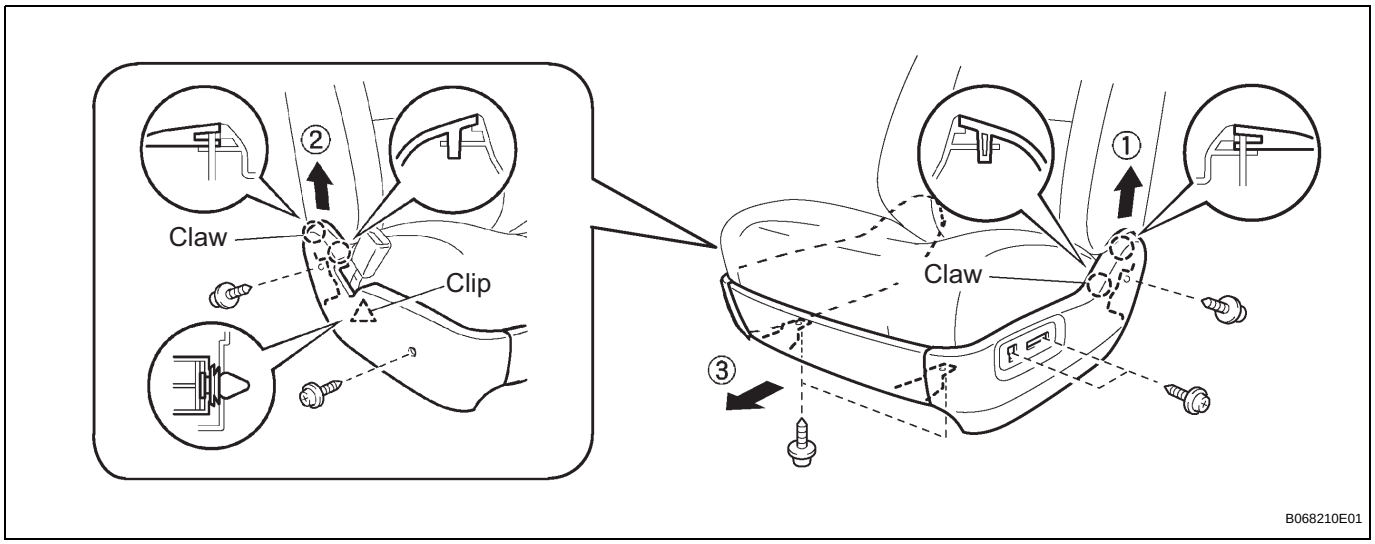

   (c) Remove the screw and front seat cushion shield inner LH from the front seat cushion shield inner No. 1 LH.

SE

7. REMOVE NO. 1 FRONT SEAT CUSHION SHIELD INNER LH

(a) Remove the screw and front seat cushion shield inner No. 1 LH from the front seat cushion shield LH.

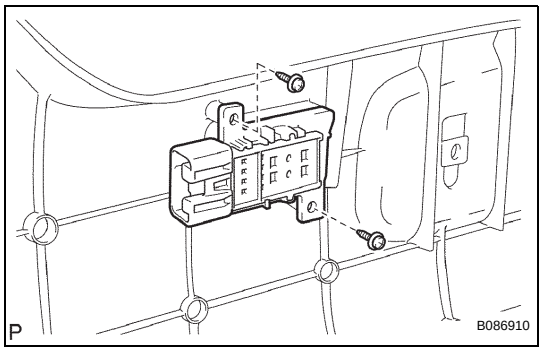

8. REMOVE POWER SEAT SWITCH (for Driver Seat)

(a) Remove the 2 screws and the power seat switch.

9. REMOVE FRONT POWER SEAT SWITCH LH

(a) Disconnect the connector.
(b) Remove the 3 screws and power seat switch LH.

10. REMOVE FRONT SEAT INNER BELT ASSEMBLY LH

(a) Disconnect the connectors.
(b) Remove the nut and inner belt assembly.

11. REMOVE FRONT SEAT TRACK COVER LH FRONT OUTER

(a) Remove the clip, 2 screws and seat track cover front outer.

12. REMOVE FRONT SEAT TRACK COVER LH FRONT INNER

(a) Remove the clip, 2 screws and seat track cover front inner.

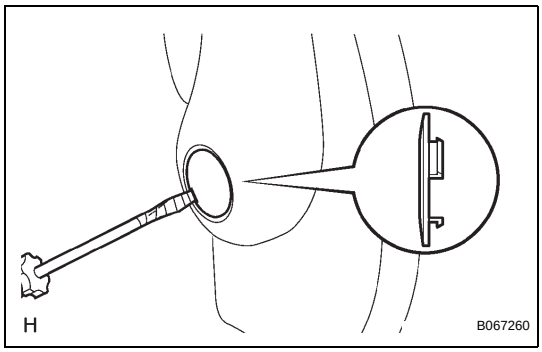

13. REMOVE FRONT SEAT INNER LH ARMREST ASSEMBLY

(a) Using a screwdriver, pry out the armrest cap.
HINT:
Tape the screwdriver tip before use.
(b) Remove the bolt and armrest assembly.
(c) Remove the 2 washers and 2 spacers.

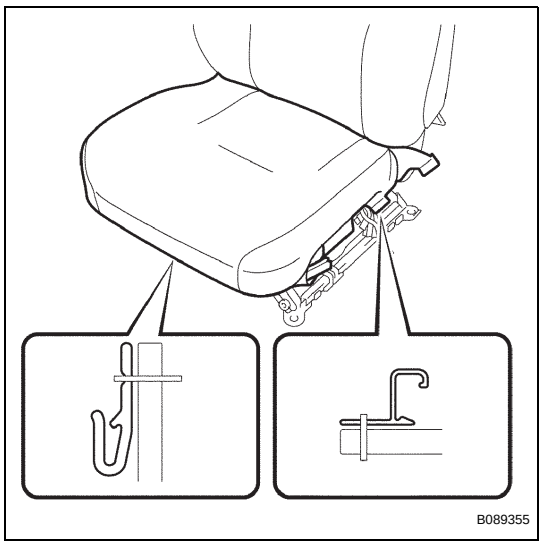

14. REMOVE SEAT CUSHION COVER WITH PAD

(a) with Seat heater:
Disconnect the connector.
(b) Disengage the clamps and hooks.
(c) Disengage the hooks and remove the seat cushion cover with pad.

15. REMOVE SEPARATE TYPE FRONT SEAT CUSHION COVER

(a) Remove the hog rings and the separate type front seat cushion cover.

16. REMOVE FRONT SEAT CUSHION HEATER ASSEMBLY LH (w/ Seat Heater System)

(a) Cut off the tack pins which fasten the seat heater and then remove the front seat heater from the cushion cover.
NOTICE:
Be careful not to damage the seat cushion cover.

SE

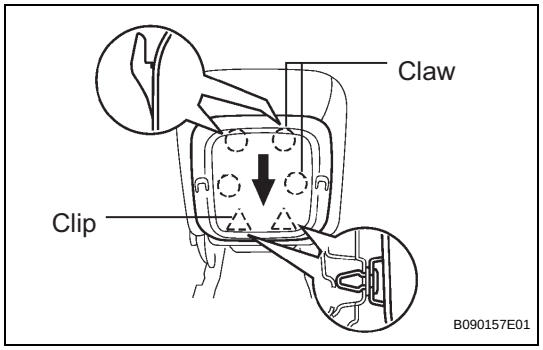

17. REMOVE FRONT SEATBACK BOARD LH

(a) Disengage the clips.

(b) Remove the seatback board by pulling it out in the arrow mark direction shown in the illustration.

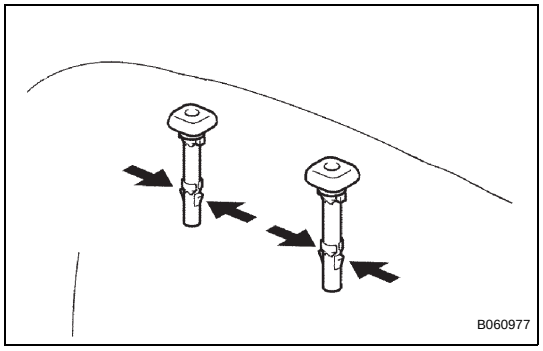

18. REMOVE FRONT SEAT HEADREST SUPPORT

(a) Disengage the claw and remove the 2 headrest supports.

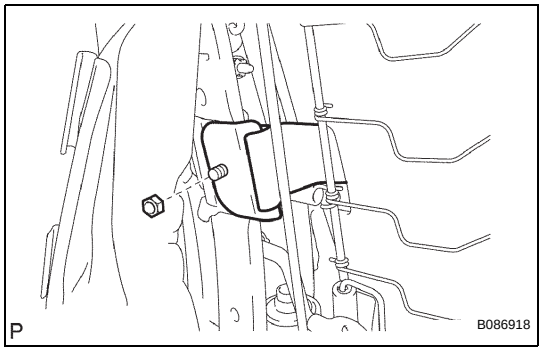

19. REMOVE SEATBACK COVER WITH PAD

(a) with Side airbag:
Remove the nut and disengage the separate type front seatback cover bracket.

(b) Remove the hog rings and disengage the hooks.

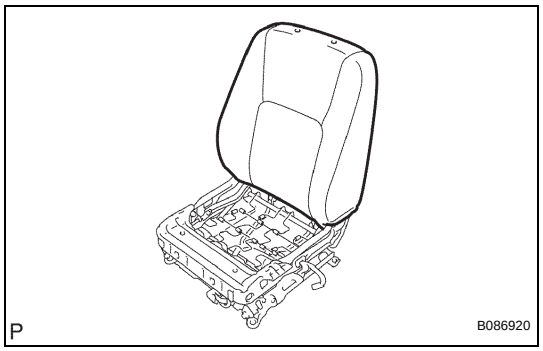

(c) Remove the seatback cover with pad.

20. REMOVE FRONT SEATBACK COVER LH

(a) Remove the hog rings and the front seatback cover.

21. REMOVE FRONT SEATBACK HEATER ASSEMBLY LH (w/ Seat Heater System)

(a) Cut off the tack pins which fasten the seat heater and then remove the front seat heater from the front seatback cover.
NOTICE:
Be careful not to damage the seatback cover.

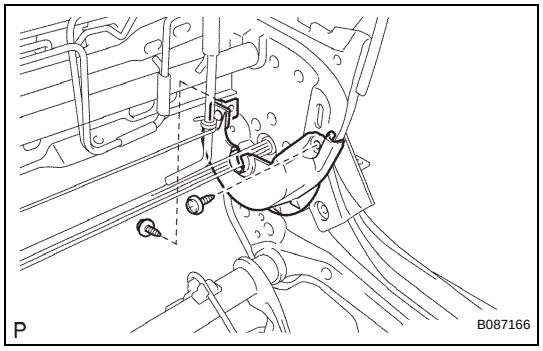

22. REMOVE RECLINING ADJUSTER INSIDE COVER LH

(a) Remove the 2 screws and the reclining adjuster inside cover LH (lower).

SE

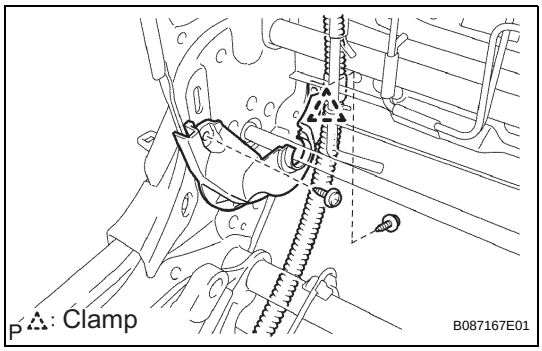

23. REMOVE RECLINING ADJUSTER INSIDE COVER RH
(a) Disengage the clamp.
(b) Remove the 2 screws and the reclining adjuster inside cover RH (lower).

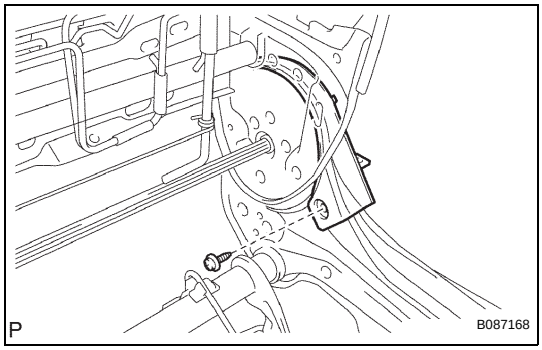

24. REMOVE RECLINING ADJUSTER INSIDE COVER LH
(a) Remove the screw and the reclining adjuster inside cover LH (upper).

25. REMOVE RECLINING ADJUSTER INSIDE COVER RH
HINT:
Use the same procedures for the RH side and LH side.

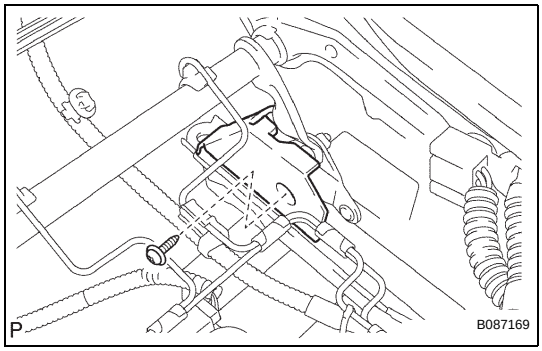

26. REMOVE FRONT SEAT CUSHION SHIELD LOWER LH
(a) Remove the screw and the front seat cushion shield lower LH.

27. REMOVE FRONT SEAT CUSHION SHIELD LOWER RH
HINT:
Use the same procedures for the RH side and LH side.

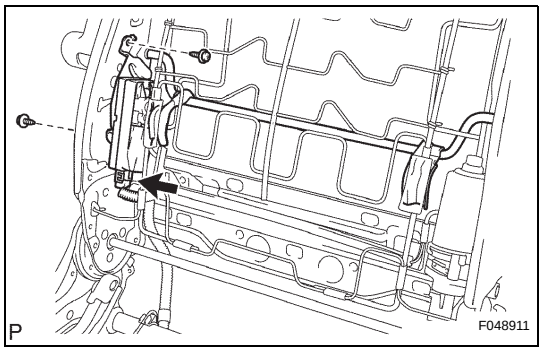

28. REMOVE LUMBAR SUPPORT ADJUSTER ASSEMBLY LH (for Driver Seat)
(a) Disconnect the connector.
(b) Remove the 2 screws and the lumbar support adjuster assembly LH.

29. REMOVE SEAT POSITION AIRBAG SENSOR (for Driver Seat) (See page RS-482)

REASSEMBLY

1. **INSTALL SEAT POSITION AIRBAG SENSOR (for Driver Seat) (See page RS-483)**
2. **INSTALL LUMBAR SUPPORT ADJUSTER ASSEMBLY LH**
   (a) Install the seat side table leg cover.
3. **INSTALL FRONT SEAT CUSHION SHIELD LOWER LH**
   (a) Install the front seat cushion shield lower LH with the screw.
4. **INSTALL FRONT SEAT CUSHION SHIELD LOWER RH**
   HINT:
   Use the same procedures for the RH side and LH side.
5. **INSTALL RECLINING ADJUSTER INSIDE COVER LH**
   (a) Install the reclining adjuster inside cover LH (upper) with the screw.
6. **INSTALL RECLINING ADJUSTER INSIDE COVER RH**
   HINT:
   Use the same procedures for the RH side and LH side.
7. **INSTALL RECLINING ADJUSTER INSIDE COVER RH**
   (a) Install the reclining adjuster inside cover RH (lower) with the 2 screws.
   (b) Install the clamp.
8. **INSTALL RECLINING ADJUSTER INSIDE COVER LH**
   (a) Install the reclining adjuster inside cover LH (lower) with the 2 screws.
9. **INSTALL FRONT SEATBACK HEATER ASSEMBLY LH (w/ Seat Heater System)**
   (a) Place the seat heater on the seatback cover.
   (b) Install the seat heater to the seatback cover with new tack pins.

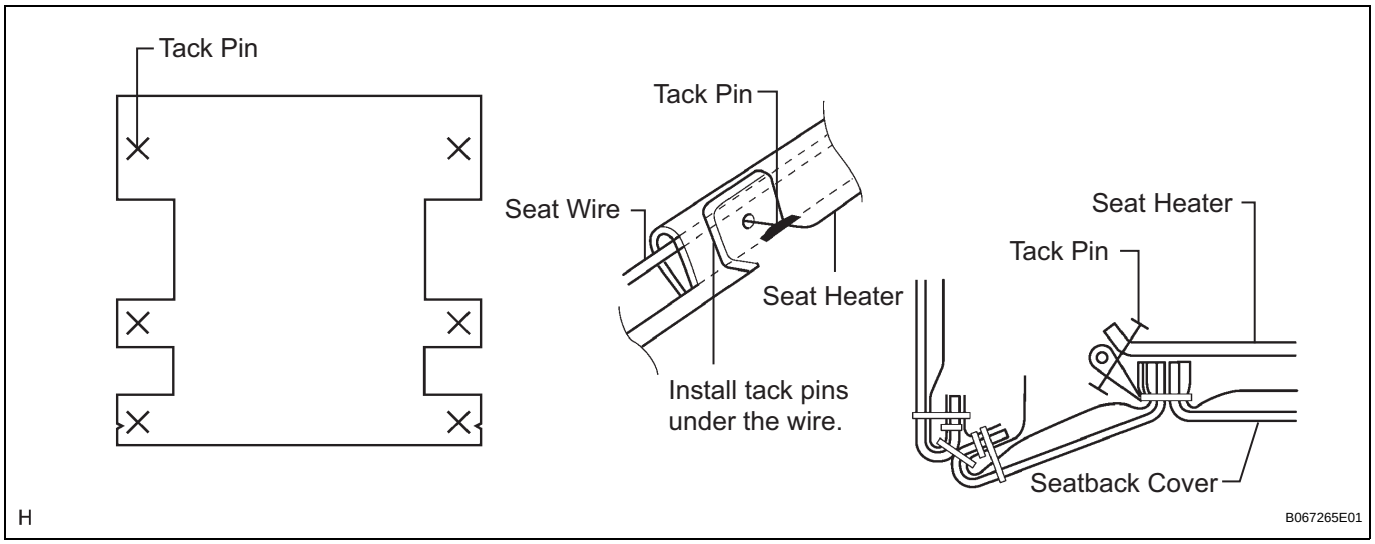

NOTICE:
Do not substitute other metal parts for tack pins.

SE

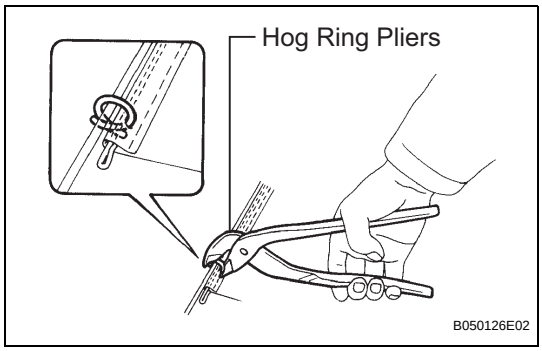

10. INSTALL FRONT SEATBACK COVER LH

(a) Install the seatback pad.

(b) Cover the top of the seatback pad with the seatback cover.

(c) Using hog ring pliers, completely install the seatback cover with new hog rings.

NOTICE:

- **Be careful not to damage the cover.**
- **When installing the hog rings, take care to prevent wrinkles as much as possible.**

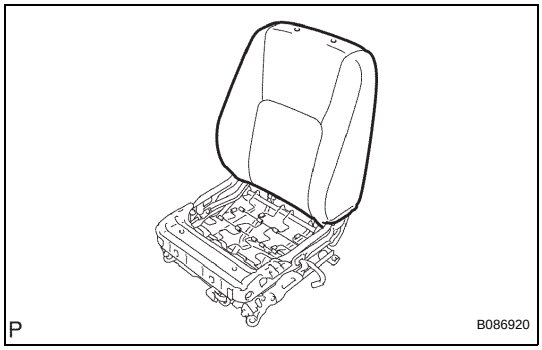

11. INSTALL SEATBACK COVER WITH PAD

(a) Install the seatback cover with pad.

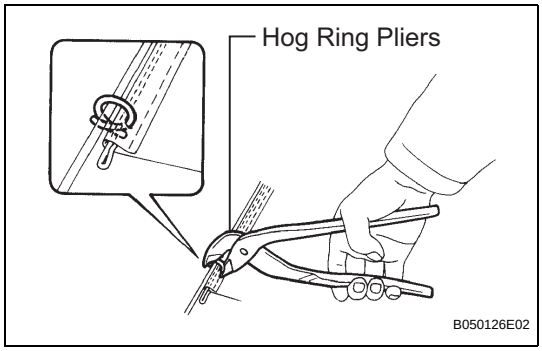

(b) Using hog ring pliers, install new hog rings and hooks.

NOTICE:

- **Be careful not to damage the cover.**
- **When installing the hog rings, take care to minimize wrinkles as much as possible.**

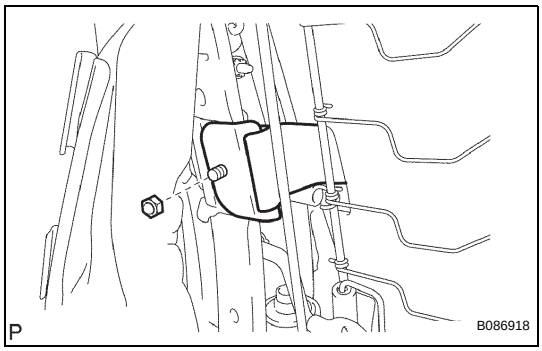

(c) with Side airbag:
Install the seatback cover bracket with the nut.
Torque: 5.5 N*m (56 kgf*cm, 48 in.*lbf)

NOTICE:

- **For a vehicle with side airbag, the side airbag may not be activated normally unless the seatback cover is securely installed.**
- **Check that the strap has no twist after installing the bracket.**

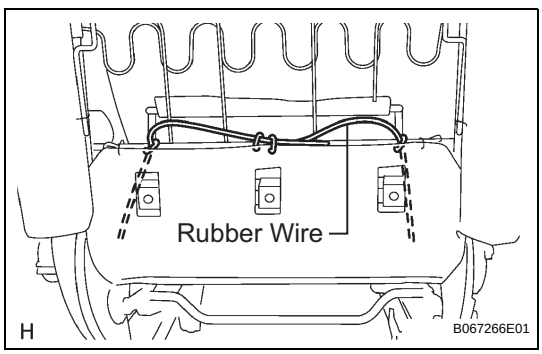

(d) Attach a rubber wire with new hog rings, as shown in the illustration.

(e) Using hog ring pliers, install new hog rings.

NOTICE:

- **Be careful not to damage the cover.**
- **When installing the hog rings, take care to prevent wrinkles as much as possible.**

12. INSTALL FRONT SEAT HEADREST SUPPORT

(a) Install the 2 headrest supports.

SE

13. INSTALL FRONT SEATBACK BOARD LH

(a) Install the front seatback board LH.

14. INSTALL FRONT SEAT INNER LH ARMREST ASSEMBLY

(a) Install the armrest with the bolt.
Torque: 20 N*m (200 kgf*cm, 14 ft.*lbf)

(b) Install the armrest cap.

15. INSTALL FRONT SEAT CUSHION HEATER ASSEMBLY LH (w/ Seat Heater System)

(a) Place the seat heater on the seat cushion cover.

(b) Install the seat heater to the seat cushion cover with new tack pins.

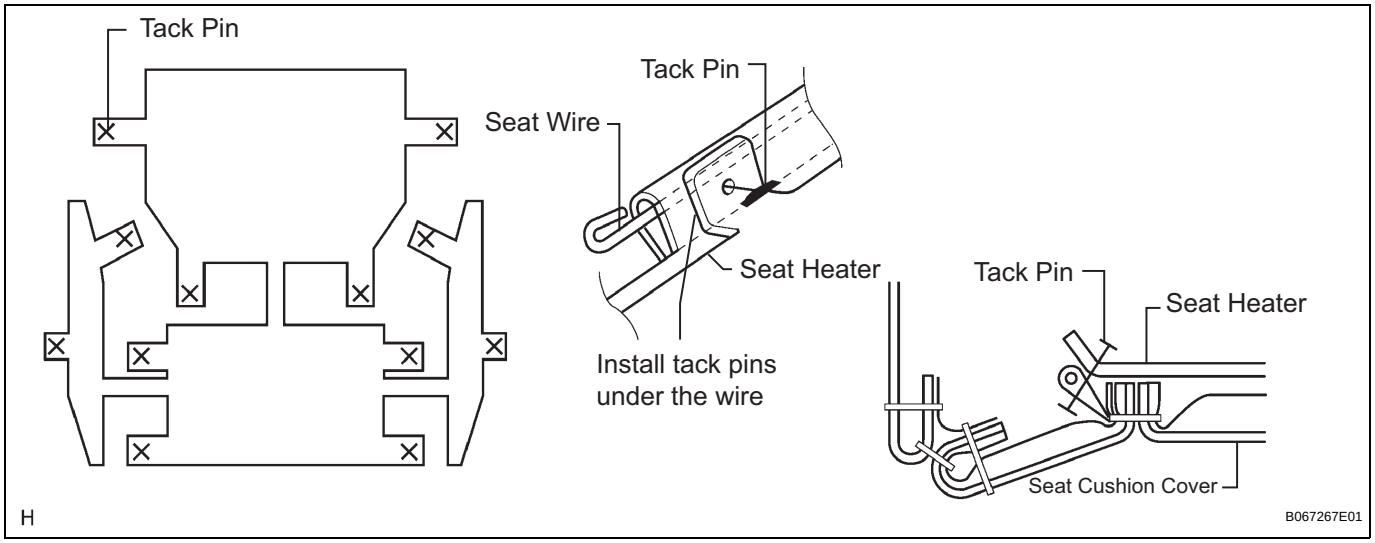

NOTICE:
Do not substitute other metal parts for tack pins.

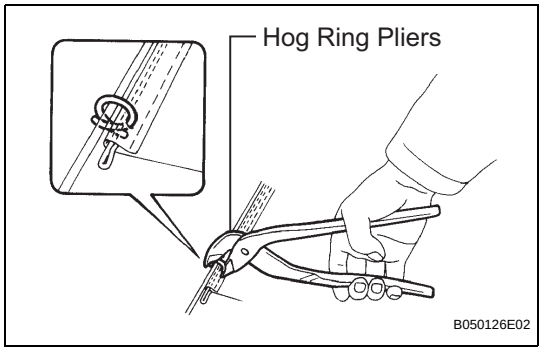

16. INSTALL SEPARATE TYPE FRONT SEAT CUSHION COVER

(a) Install the seat cushion pad to the seat cushion cover.

(b) Using hog ring pliers, install the seat cushion cover to the seat cushion pad with new hog rings.
NOTICE:
- **Be careful not to damage the cover.**
- **When installing the hog rings, take care to prevent wrinkles as much as possible.**

17. INSTALL SEAT CUSHION COVER WITH PAD

(a) Install the seat cushion cover with pad.

(b) Install the clamps and hooks.

(c) with Seat heater:
Connect the connector.

18. INSTALL FRONT SEAT TRACK COVER LH FRONT INNER

(a) Install the seat track cover front inner with the clip and 2 screws.

SE

19. INSTALL FRONT SEAT TRACK COVER LH FRONT OUTER

(a) Install the seat track cover front outer with the clip and 2 screws.

20. INSTALL FRONT SEAT INNER BELT ASSEMBLY LH

(a) Install the inner belt assembly with the nut.
Torque: 41 N*m (418 kgf*cm, 30 ft.*lbf)
HINT:
Check that the inner seat belt assembly moves smoothly.

(b) Connect the connectors.

21. INSTALL FRONT POWER SEAT SWITCH LH

(a) Install the power seat switch LH with the 3 screws.

(b) Connect the connector.

22. INSTALL POWER SEAT SWITCH (for Driver Seat)

(a) Install the power seat switch with the 2 screws.

23. INSTALL NO. 1 FRONT SEAT CUSHION SHIELD INNER LH

(a) Install the No. 1 front seat cushion shield inner LH to the front seat cushion shield LH with the screw.

24. INSTALL FRONT SEAT CUSHION SHIELD INNER LH

(a) Install the front seat cushion shield inner LH to the No. 1 front seat cushion shield inner LH with the screw.

(b) Install the front seat cushion shield LH together with front seat cushion shield inner LH and No. 1 front seat cushion shield inner LH.

(c) Install the 7 screws.

25. INSTALL SLIDE & VERTICAL POWER SEAT SWITCH KNOB

(a) Install the reclining power seat switch knob.

26. INSTALL RECLINING POWER SEAT SWITCH KNOB

(a) Install the reclining power seat switch knob.

27. INSTALL OCCUPANT CLASSIFICATION ECU (for Front Passenger Seat) (See page RS-488)

28. INSTALL FRONT SEAT SIDE TABLE (w/ Table)

(a) Install the seat side table with 4 nuts.
Torque: 13 N*m (133 kgf*cm, 10 ft.*lbf)

29. INSTALL FRONT SEAT SIDE TABLE LEG COVER (w/ Table)

(a) Install the seat side table leg cover.