REAR NO. 2 SEAT ASSEMBLY (for Manual Seat Type LH Side)

COMPONENTS

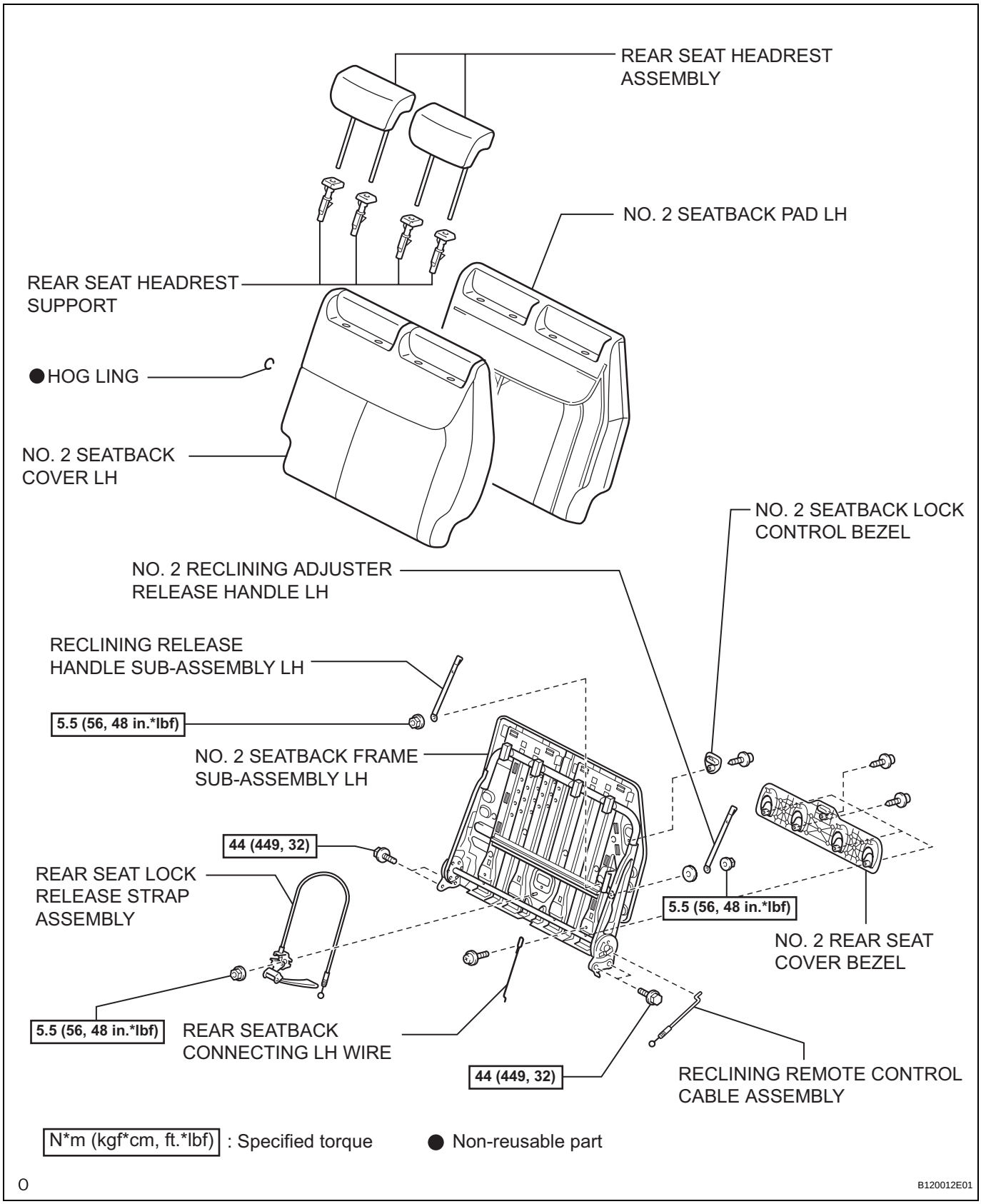

SE

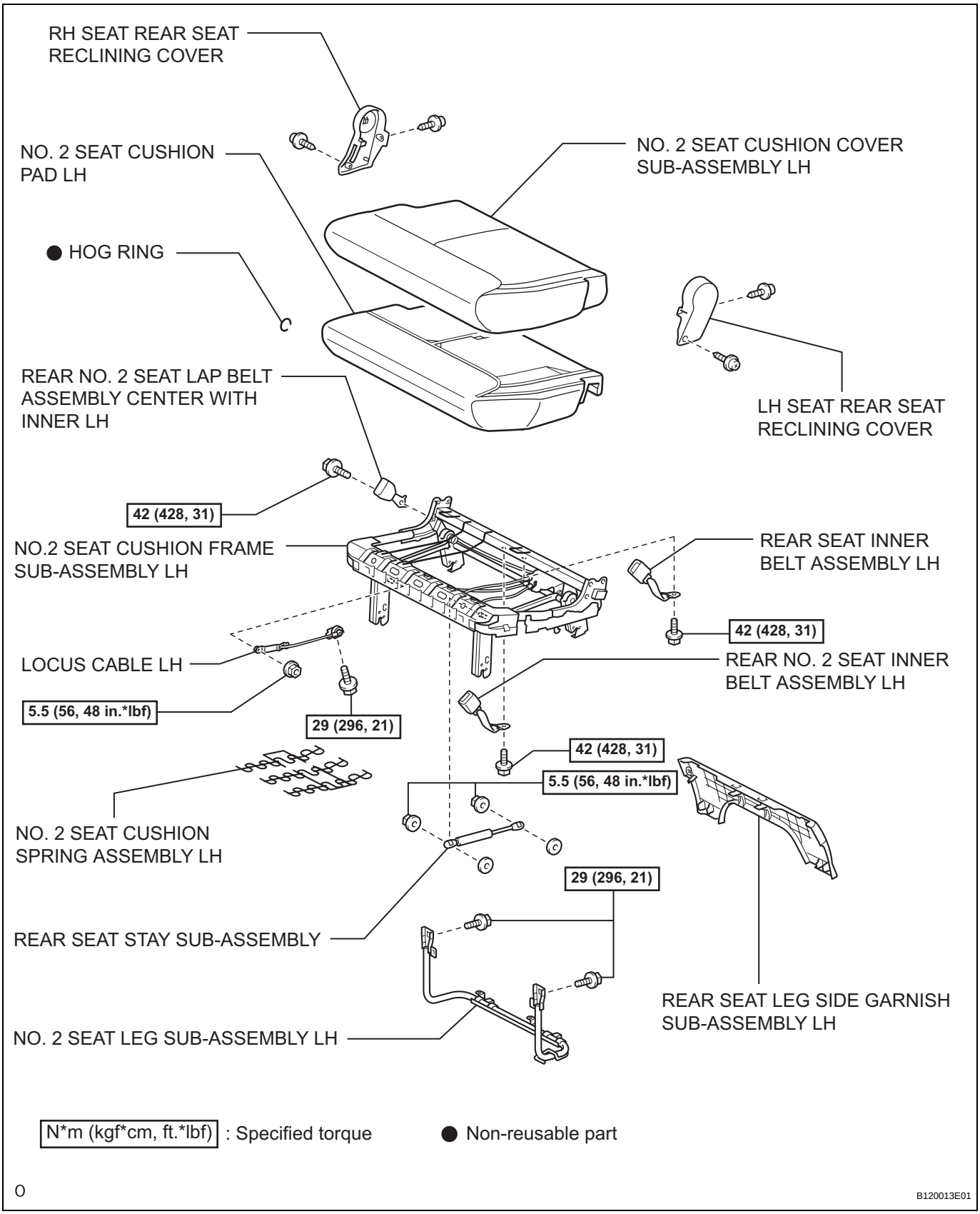
RH SEAT REAR SEAT RECLINING COVER
NO. 2 SEAT CUSHION PAD LH
NO. 2 SEAT CUSHION COVER SUB-ASSEMBLY LH
● HOG RING
REAR NO. 2 SEAT LAP BELT ASSEMBLY CENTER WITH INNER LH
LH SEAT REAR SEAT RECLINING COVER
42 (428, 31)
NO.2 SEAT CUSHION FRAME SUB-ASSEMBLY LH
REAR SEAT INNER BELT ASSEMBLY LH
42 (428, 31)
LOCUS CABLE LH
REAR NO. 2 SEAT INNER BELT ASSEMBLY LH
5.5 (56, 48 in.*lbf)
29 (296, 21)
42 (428, 31)
5.5 (56, 48 in.*lbf)
NO. 2 SEAT CUSHION SPRING ASSEMBLY LH
29 (296, 21)
REAR SEAT STAY SUB-ASSEMBLY
REAR SEAT LEG SIDE GARNISH SUB-ASSEMBLY LH
NO. 2 SEAT LEG SUB-ASSEMBLY LH
N*m (kgf*cm, ft.*lbf) : Specified torque
● Non-reusable part
B120013E01

SE