REMOVAL

1. DISCONNECT CABLE FROM NEGATIVE BATTERY TERMINAL

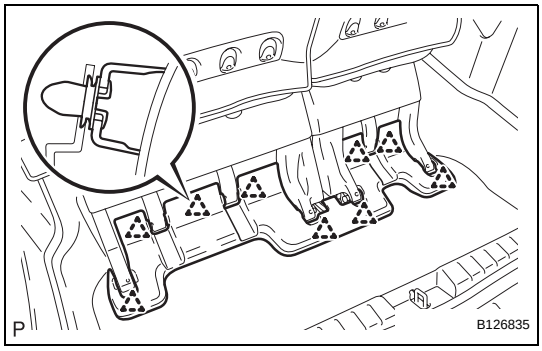

2. REMOVE REAR NO. 2 SEAT LEG SIDE GARNISH SUB-ASSEMBLY

(a) Disengage the 9 clips and remove the rear No. 2 seat leg side garnish sub-assembly.
(b) Remove the 9 clips from the rear No. 2 seat leg side garnish sub-assembly.

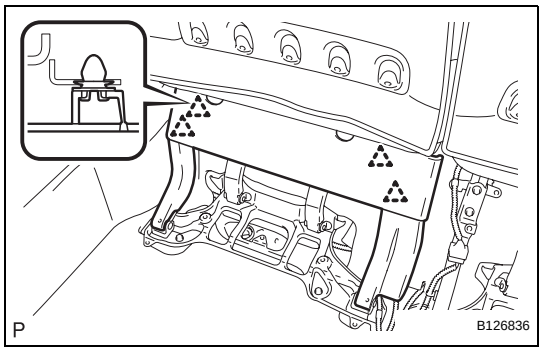

3. REMOVE REAR SEAT LEG SIDE GARNISH SUB-ASSEMBLY

(a) Disengage the 4 clips and remove the rear seat leg side garnish sub-assembly.
(b) Remove the 4 clips from the rear seat leg side garnish sub-assembly.

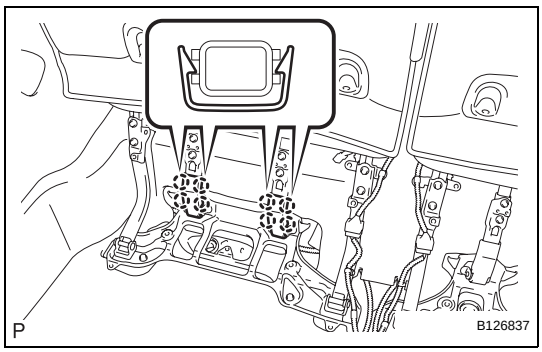

4. REMOVE NO. 2 SEAT HINGE COVER

(a) Disengage the 8 claws and remove both No. 2 seat hinge covers.

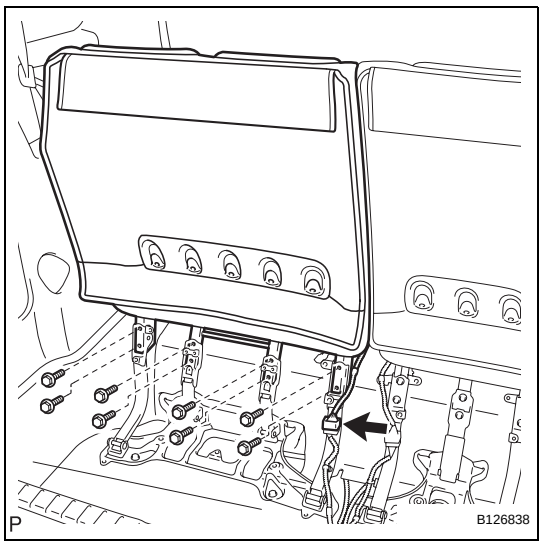

5. REMOVE REAR NO. 2 SEAT ASSEMBLY

(a) Disconnect the connector.
(b) Remove the 8 bolts.

SE

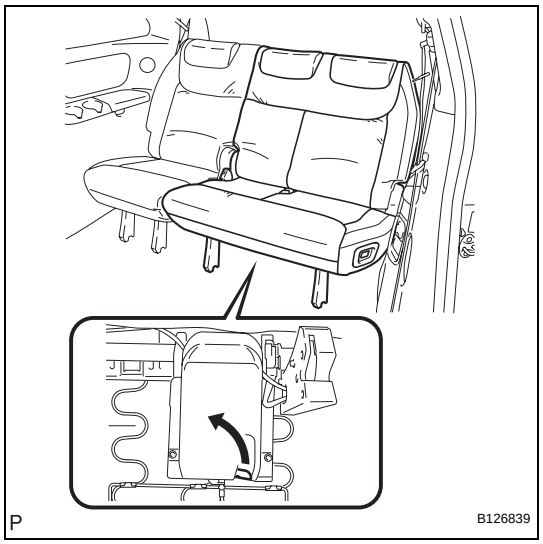

(c) Pull the lever under the No. 2 seat cushion sub-assembly and remove the rear No. 2 seat assembly.

DISASSEMBLY

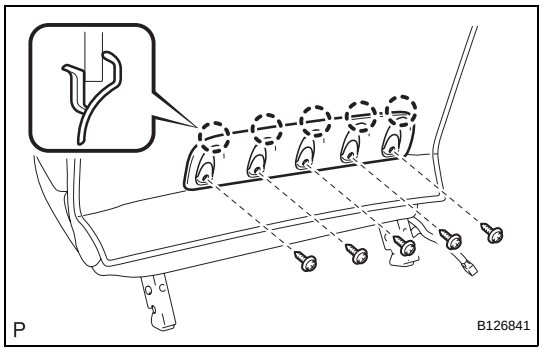

1. REMOVE REAR NO. 2 SEAT COVER BEZEL

(a) Remove the 5 screws.

(b) Disengage the 5 claws and remove the rear No. 2 seat cover bezel.

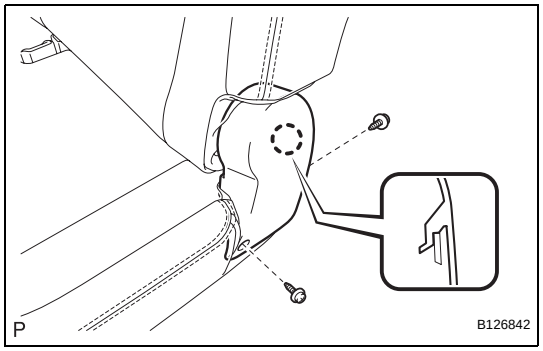

2. REMOVE REAR SEAT RECLINING COVER LH

(a) Remove the 2 screws.

(b) Disengage the claw and remove the rear seat reclining cover LH.

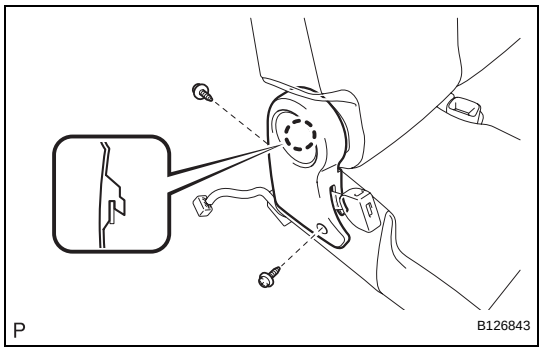

3. REMOVE REAR SEAT RECLINING COVER RH

(a) Remove the 2 screws.

(b) Disengage the claw and remove the rear seat reclining cover RH.

4. REMOVE REAR SEAT HEADREST ASSEMBLY

SE

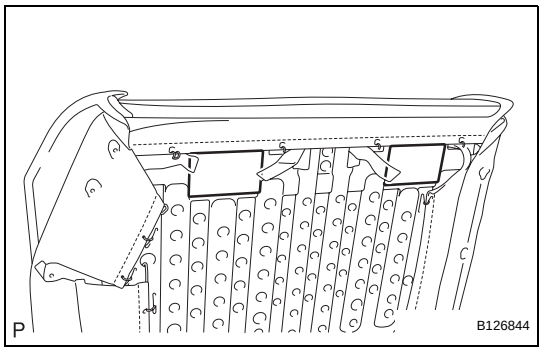

5. REMOVE REAR NO. 2 SEAT HEADREST SUPPORT ASSEMBLY LH

(a) Remove the 2 pads.

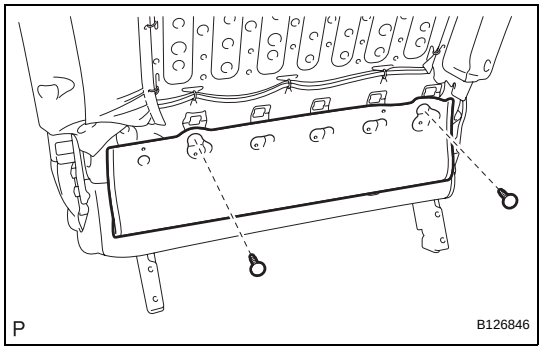

(b) Remove the 2 clips.

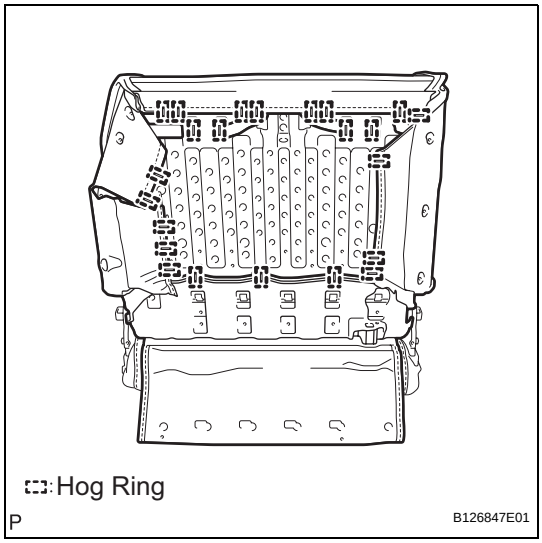

(c) Remove the 23 hog rings and disconnect the No. 2 seatback cover sub-assembly with pad.

(d) Turn back the No. 2 seatback cover sub-assembly.

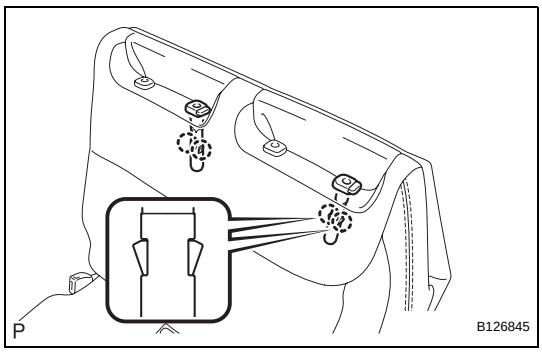

(e) Disengage the 4 claws and remove both rear No. 2 seat headrest support assemblies LH.

6. REMOVE REAR NO. 2 SEAT HEADREST SUPPORT ASSEMBLY RH

HINT:

Use the same procedure described for the LH side.

SE

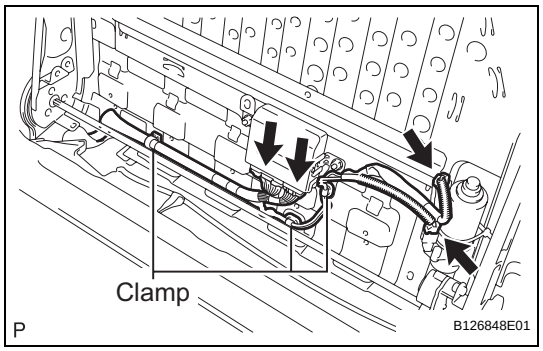

7. REMOVE NO. 2 SEATBACK COVER SUB-ASSEMBLY WITH PAD

(a) Disconnect the connectors.

(b) Disengage the 3 clamps and remove the No. 2 seatback cover sub-assembly with pad.

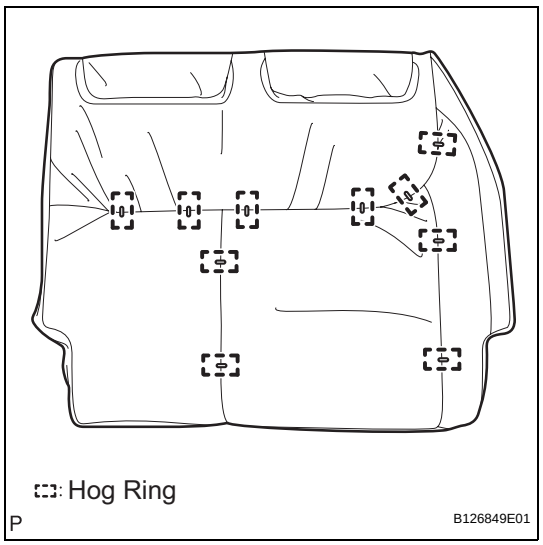

8. REMOVE NO. 2 SEATBACK COVER SUB-ASSEMBLY

(a) Remove the 10 hog rings and No. 2 seatback cover sub-assembly.

9. REMOVE NO. 2 SEATBACK PAD

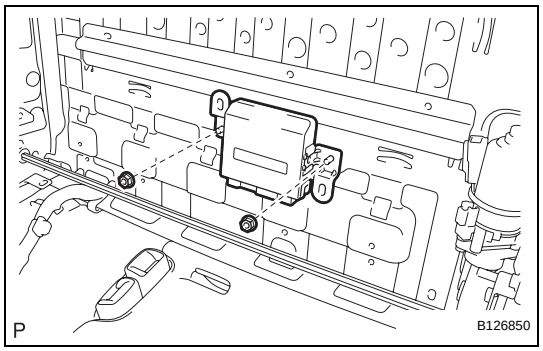

10. REMOVE FOLD SEAT CONTROL ECU

(a) Remove the 2 nuts and fold seat control ECU.

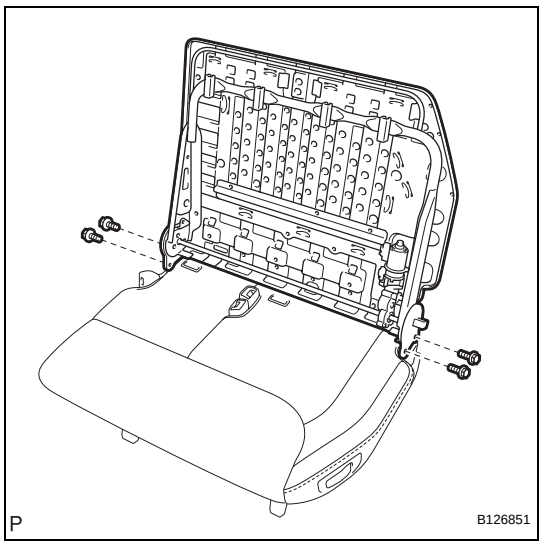

11. REMOVE NO. 2 SEATBACK FRAME SUB-ASSEMBLY

(a) Remove the 4 bolts and No. 2 seatback frame sub-assembly.

SE

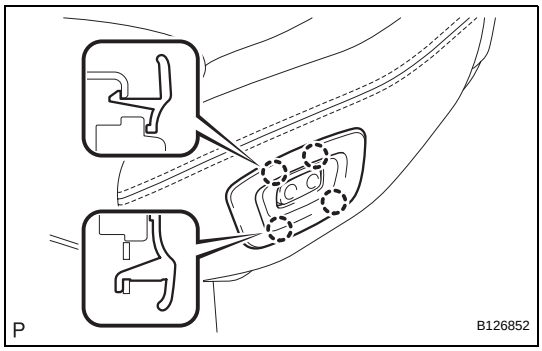

12. REMOVE RECLINING REMOTE CONTROL LEVER BEZEL

(a) Disengage the 4 claws and remove the reclining remote control lever bezel.

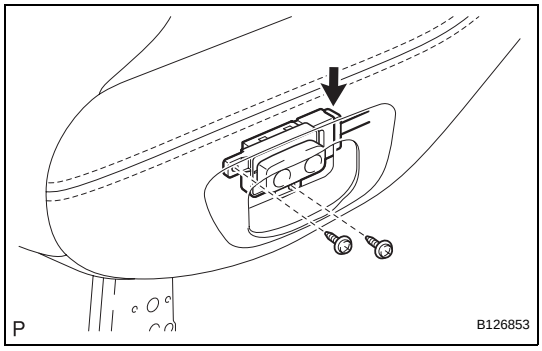

13. REMOVE REAR POWER SEAT SWITCH

(a) Remove the 2 screws.

(b) Disconnect the connector and remove the rear power seat switch.

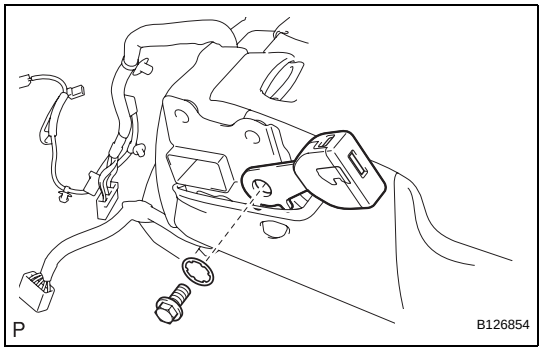

14. REMOVE REAR NO. 2 SEAT LAP BELT ASSEMBLY CENTER WITH INNER

(a) Remove the bolt, washer and rear No. 2 seat lap belt assembly center with inner.

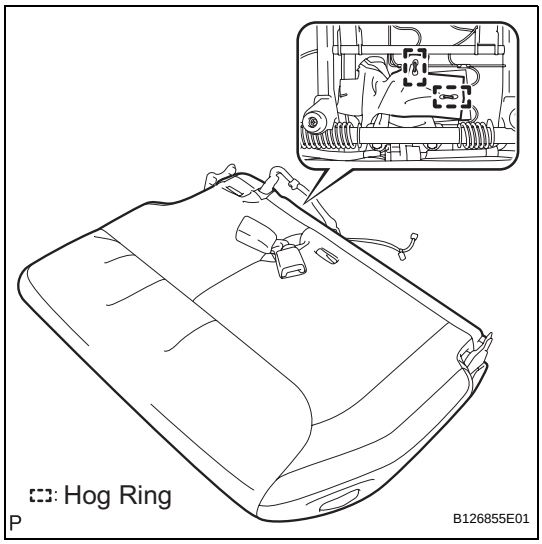

15. REMOVE REAR NO. 2 SEAT BELT ASSEMBLY INNER

(a) Remove the 2 hog rings.

SE

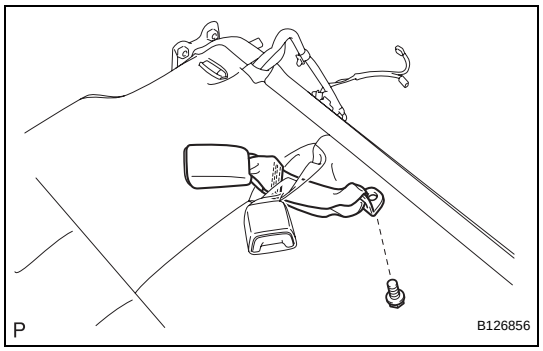

(b) Remove the bolt and rear No. 2 seat belt assembly inner.

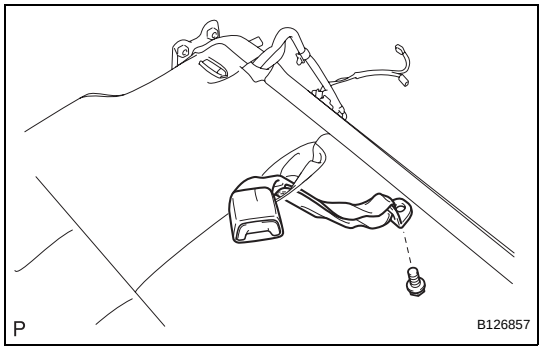

16. REMOVE REAR SEAT BELT ASSEMBLY INNER

(a) Remove the bolt and rear seat belt assembly inner.

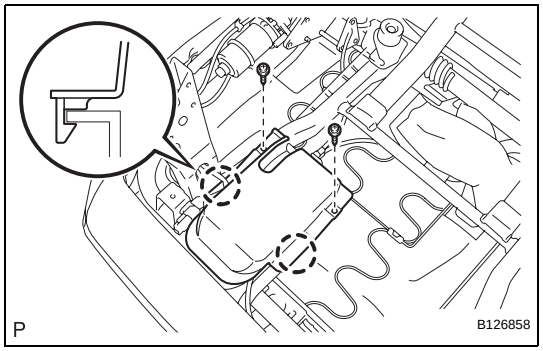

17. REMOVE REAR SEAT COVER

(a) Remove the 2 screws.

(b) Disengage the 2 claws and remove the rear seat cover.

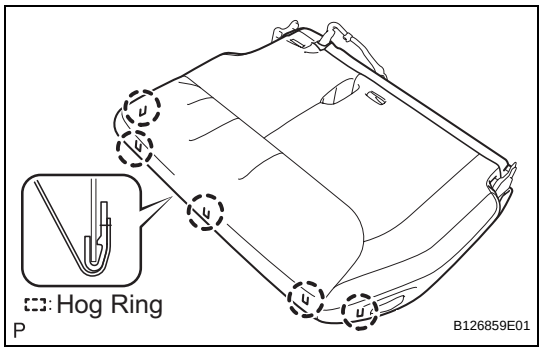

18. REMOVE NO. 2 SEAT CUSHION COVER SUB-ASSEMBLY WITH PAD

(a) Raise the 5 rear seat cushion edge protectors.

(b) Disengage the hooks and remove the No. 2 seat cushion cover sub-assembly with pad.

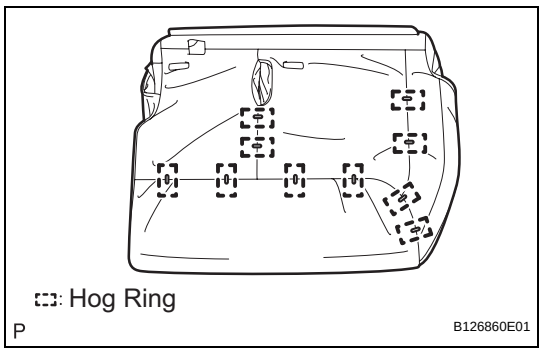

19. REMOVE NO. 2 SEAT CUSHION COVER SUB-ASSEMBLY

(a) Remove the 10 hog rings and No. 2 seat cushion cover sub-assembly.

20. REMOVE NO. 2 SEAT CUSHION PAD

SE

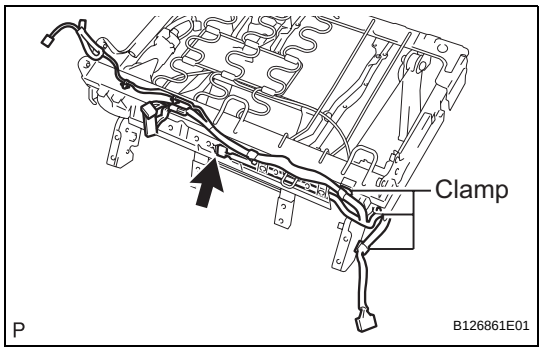

21. REMOVE REAR SEAT WIRE

(a) Disconnect the connector.

(b) Disengage the 3 clamps and remove the rear seat wire.

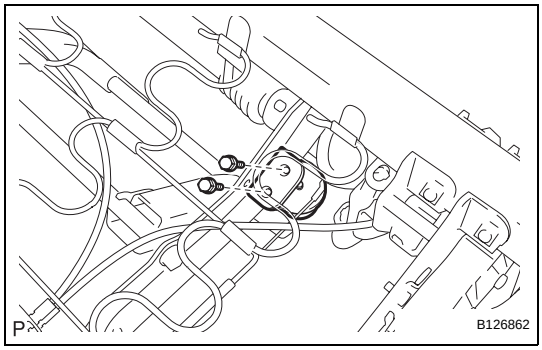

22. REMOVE NO. 2 SEAT CUSHION STOPPER

(a) Remove the 2 bolts and No. 2 seat cushion stopper.
HINT:
Use the same procedure to remove the other stopper.

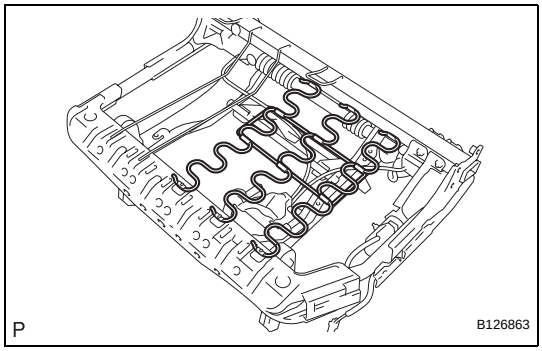

23. REMOVE NO. 2 SEAT CUSHION SPRING ASSEMBLY

(a) Remove the No. 2 seat cushion spring assembly.

24. REMOVE NO. 2 SEAT CUSHION FRAME SUB-ASSEMBLY

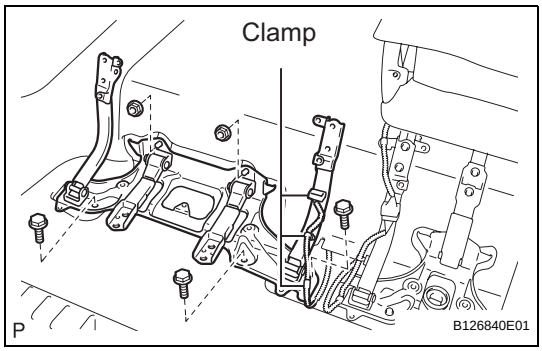

25. REMOVE NO. 2 SEAT LEG SUB-ASSEMBLY

(a) Disengage the 3 clamps.

(b) Remove the 3 bolts, 2 nuts and No. 2 seat leg sub-assembly.