ADJUSTMENT

HINT:
If the malfunction does not disappear by following the procedure in ADJUSTMENT and the rear No. 2 seat assembly needs to be replaced, do not disassemble the rear No. 2 seat assembly.

1. ADJUST FRONT LEG

HINT:
Perform the following procedure if the inner leg does not lock.

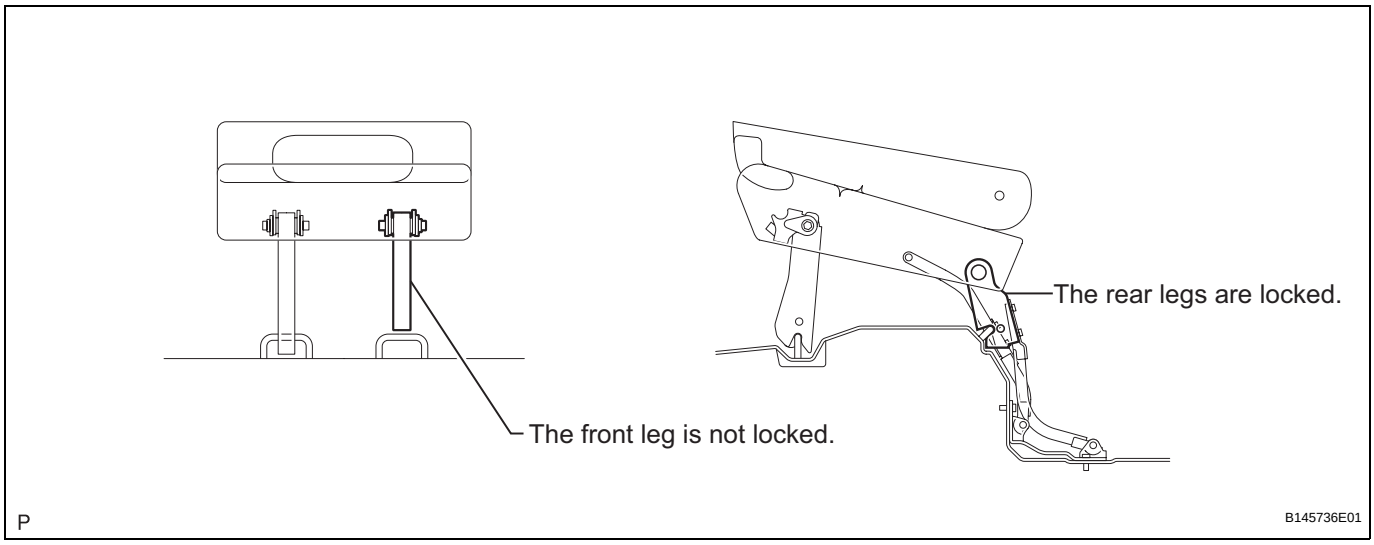

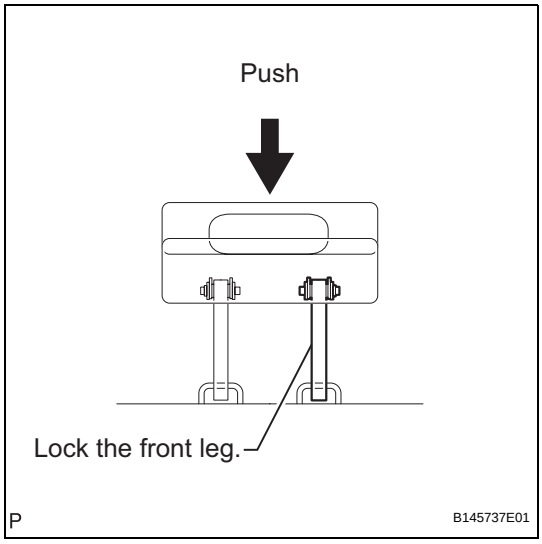

(a) Push down on the rear No. 2 seat assembly to lock the front leg.
(b) Loosen the bolt on the front leg that has locked and move the rear No. 2 seat assembly up and down a few times.
NOTICE:
Check that the front leg plate moves.

SE

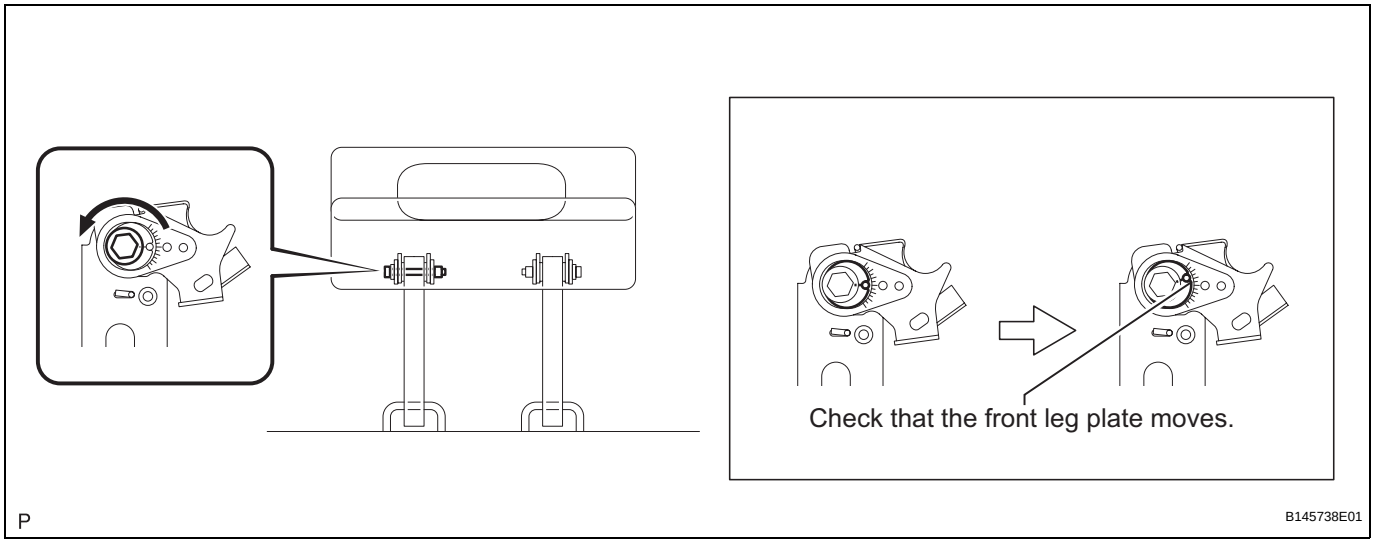

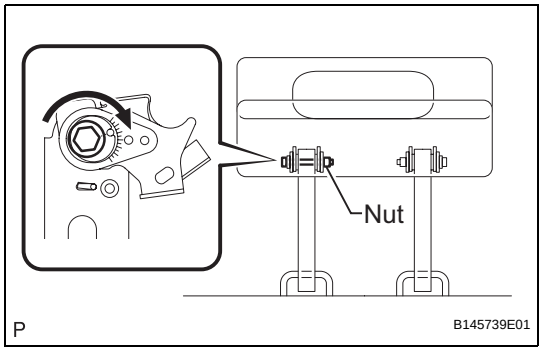

(c) Tighten the bolt.
Torque: 14.5 N*m (153 kgf*cm, 11 ft.*lbf)
NOTICE:
Hold the nut to prevent it from turning.

(d) Check that the rear No. 2 seat assembly operates normally and both front legs lock securely.
NOTICE:
If any of the front legs do not lock, loosen the bolt on the front leg that has not locked, and perform the procedure from (b) again.

2. REINSTALL REAR NO. 2 SEAT ASSEMBLY

HINT:
Perform the following procedure if the rear No. 2 seat assembly is removed with any of the 4 legs released or if the rear legs are moved with the rear No. 2 seat assembly removed.

(a) Remove the following components:
(1) Rear No. 2 seat leg side garnish sub-assembly (See page SE-116)
(2) Rear seat leg garnish sub-assembly (See page SE-116)
(3) No. 2 seat hinge cover (See page SE-116)
(4) Rear No. 2 seat assembly (See page SE-116)

(b) Lock the rear legs to the striker.
(c) Lock the front legs to the striker.

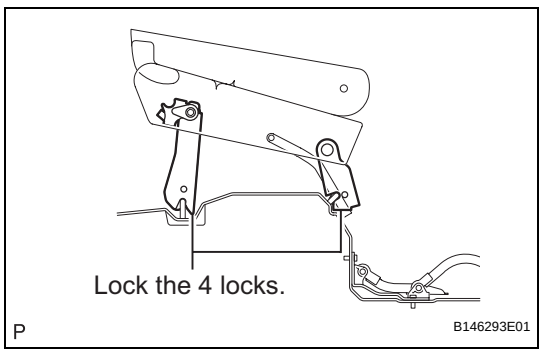

SE

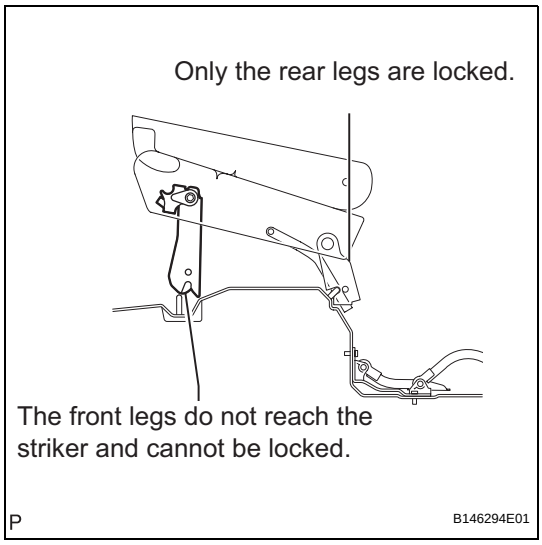

(d) If any of the front legs do not lock, perform the following procedure:

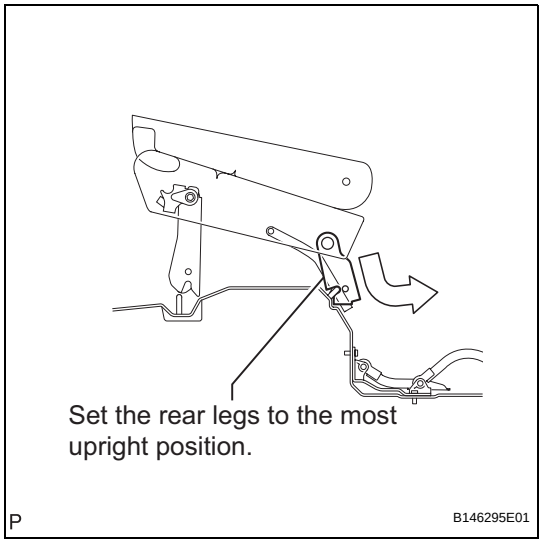

(1) Connect the connector.
(2) Operate the stowing/return switch to set the rear legs to the most upright position.

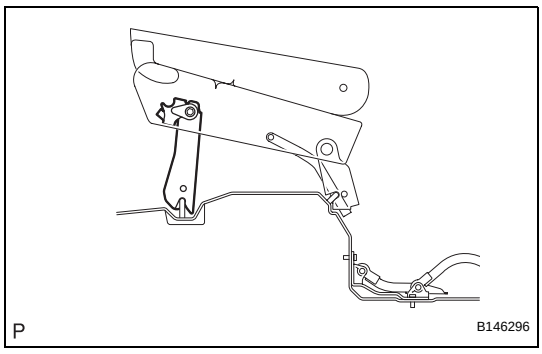

(3) Lock the front legs to the striker.

(e) Align the links of the No. 2 seat leg sub-assembly with the No. 2 seat cushion frame sub-assembly.

(f) Align the screw holes on the No. 2 cushion frame sub-assembly with the square link holes on the No. 2 seat leg sub-assembly.
HINT:
If the holes do not align, move the No. 2 seat cushion frame sub-assembly horizontally to align the holes.

SE

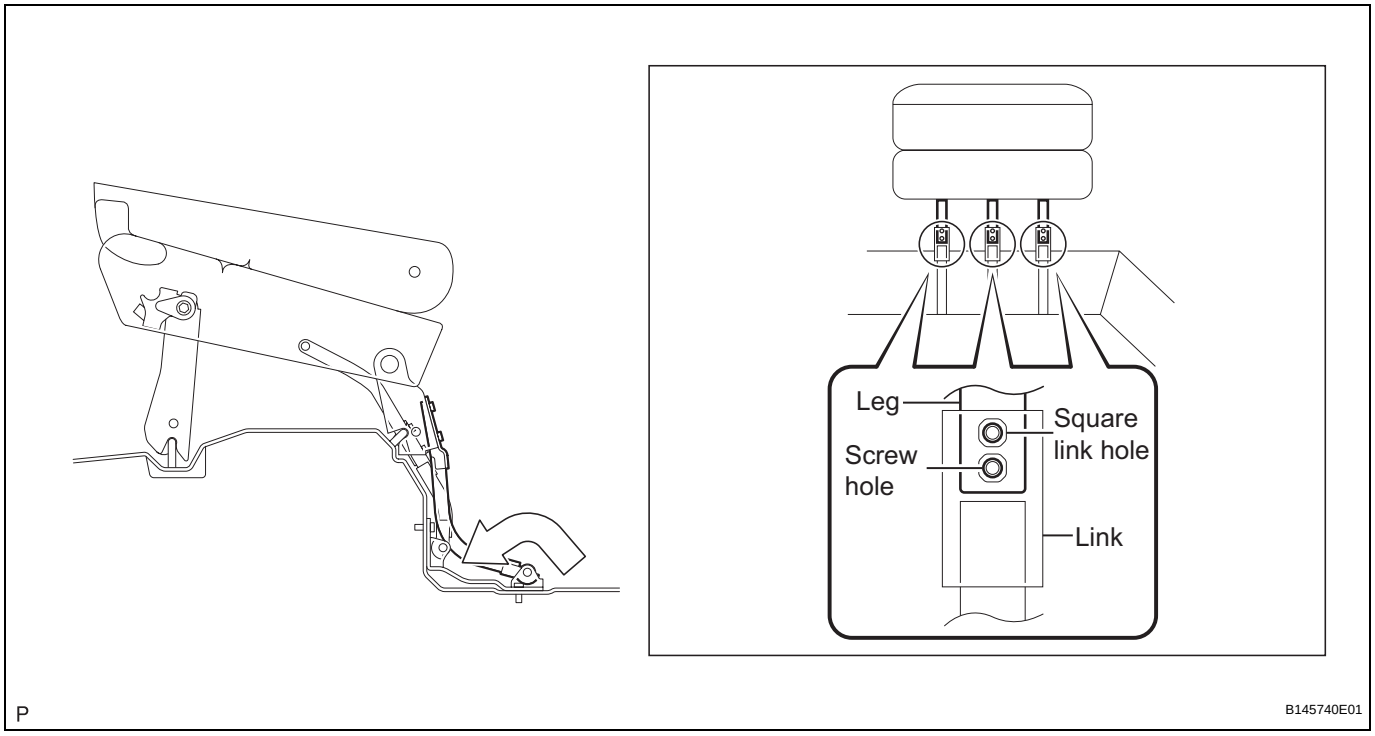

(g) Operate the stowing/return switch to adjust the rear legs so that the rear legs fit to the links of the No. 2 seat leg sub-assembly as shown in the illustration.

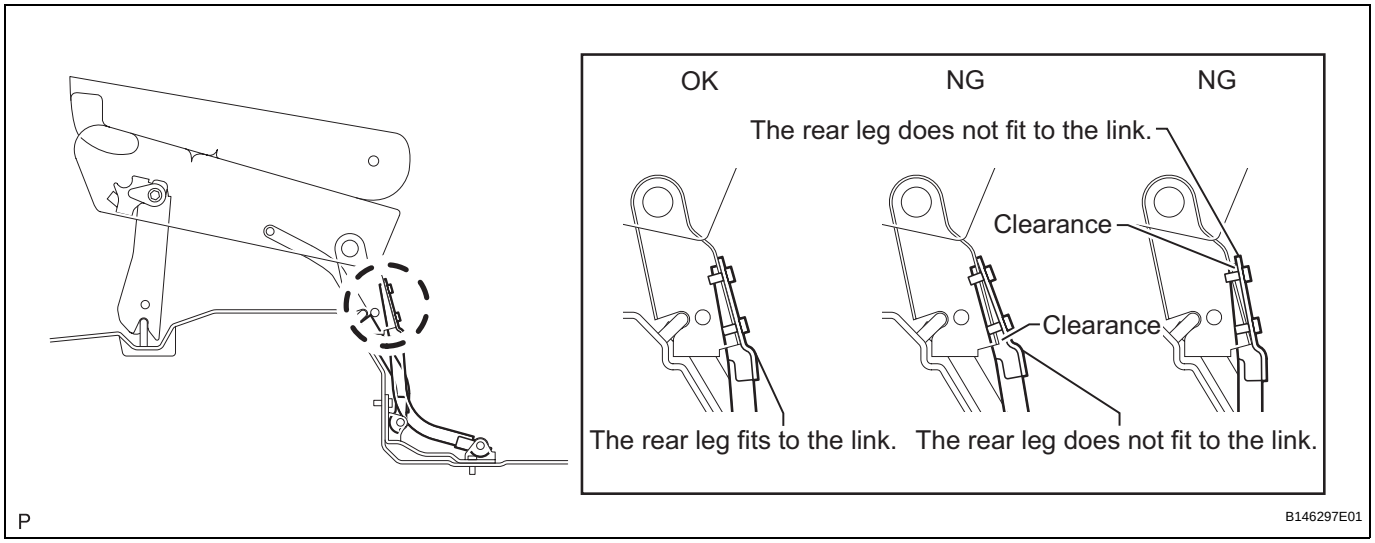

SE

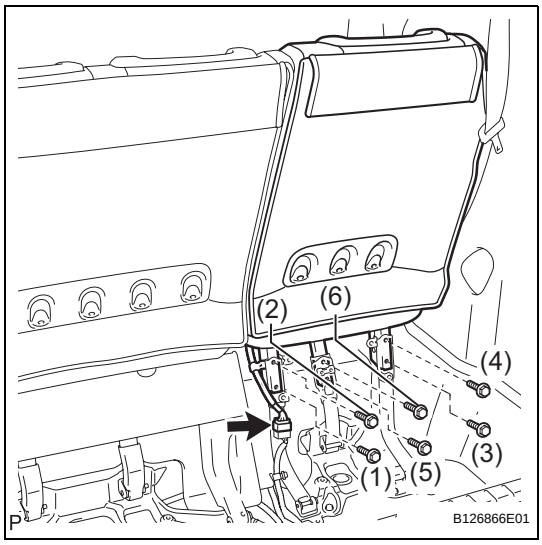

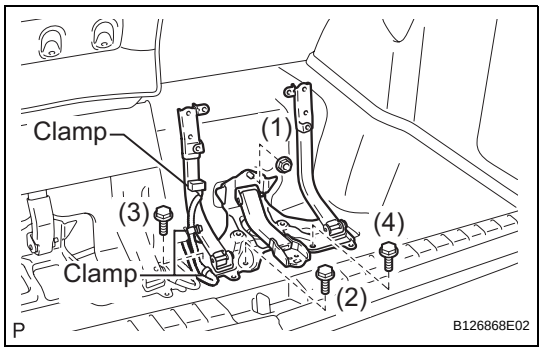

(h) Install the 6 bolts.
Torque: 19 N*m (194 kgf*cm, 14 ft.*lbf)
NOTICE:
Tighten the bolts in the order shown in the illustration.

(i) Install the following components:
(1) No. 2 seat hinge cover (See page SE-128)
(2) Rear seat leg garnish sub-assembly (See page SE-128)
(3) Rear No. 2 seat leg side garnish sub-assembly (See page SE-129)

(j) Check that the rear No. 2 seat assembly operates normally and the rear legs lock securely.
NOTICE:
If any of the front legs do not lock normally, perform the procedure in "1. ADJUST FRONT LEG".

REASSEMBLY

1. INSTALL NO. 2 SEAT LEG SUB-ASSEMBLY

(a) Install the No. 2 seat leg sub-assembly with the 3 bolts and nut.
Torque: 19 N*m (194 kgf*cm, 14 ft.*lbf)
NOTICE:
Tighten the bolts and nuts in the order shown in the illustration.

(b) Install the 3 clamps.

2. INSTALL NO. 2 SEAT CUSHION FRAME SUB-ASSEMBLY

3. INSTALL NO. 2 SEAT CUSHION SPRING ASSEMBLY

4. INSTALL NO. 2 SEAT CUSHION STOPPER

5. INSTALL REAR SEAT WIRE

6. INSTALL NO. 2 SEAT CUSHION PAD

7. INSTALL NO. 2 SEAT CUSHION COVER SUB-ASSEMBLY

(a) Using hog ring pliers, install the No. 2 seat cushion cover sub-assembly to the No. 2 seat cushion pad with 6 new hog rings.
NOTICE:
- **Be careful not to damage the cover.**
- **When installing the hog rings, take care to minimize wrinkles as much as possible.**

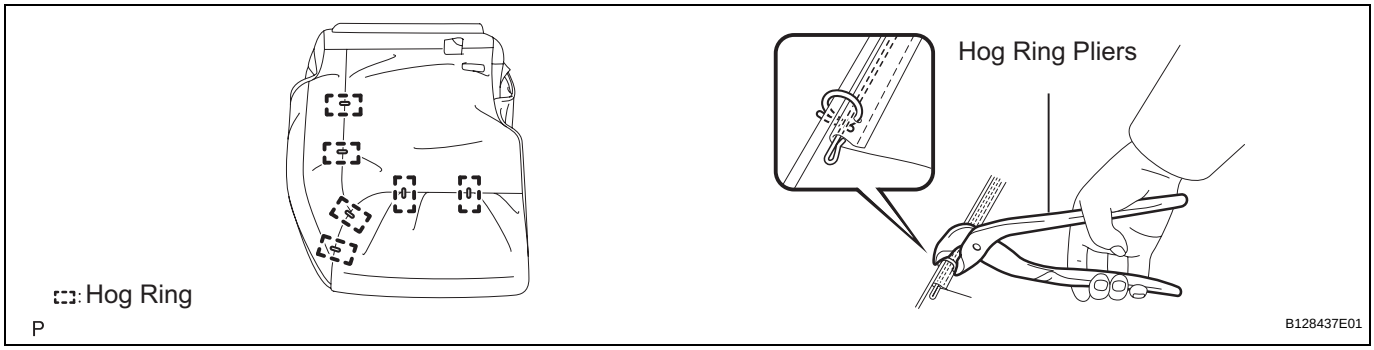

8. INSTALL NO. 2 SEAT CUSHION COVER SUB-ASSEMBLY WITH PAD

9. INSTALL REAR SEAT COVER

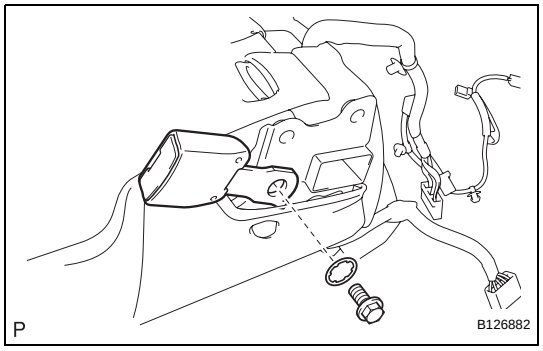

10. INSTALL REAR NO. 2 SEAT BELT ASSEMBLY INNER

(a) Install the rear No. 2 seat belt assembly inner with the bolt and washer.
Torque: 44 N*m (449 kgf*cm, 33 ft.*lbf)

11. INSTALL REAR POWER SEAT SWITCH

12. INSTALL RECLINING REMOTE CONTROL LEVER BEZEL

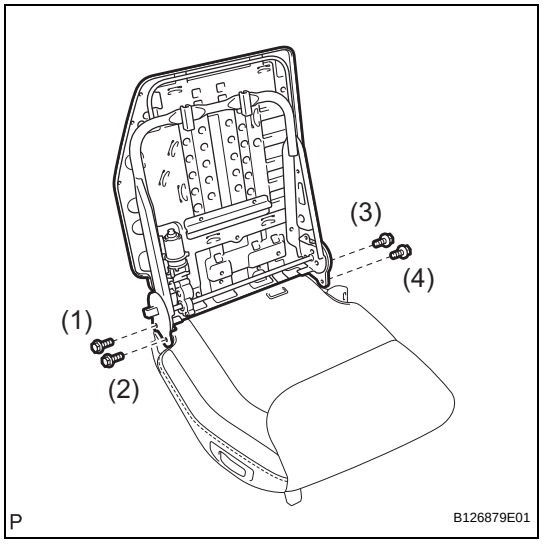

13. INSTALL NO. 2 SEATBACK FRAME SUB-ASSEMBLY

(a) Install the No. 2 seatback frame sub-assembly with the 4 bolts.
Torque: 44 N*m (449 kgf*cm, 33 ft.*lbf)
NOTICE:
- **Tighten the bolts in the following order:**
- **Temporarily tighten bolt (1).**
- **Temporarily tighten bolt (2).**
- **Fully tighten bolt (3).**
- **Fully tighten bolt (4).**
- **Fully tighten bolt (1).**
- **Fully tighten bolt (2).**

14. INSTALL FOLD SEAT CONTROL ECU

15. INSTALL NO. 2 SEATBACK PAD

16. INSTALL NO. 2 SEATBACK COVER SUB-ASSEMBLY

(a) Using hog ring pliers, install the No. 2 seatback cover sub-assembly to the No. 2 seatback pad with 6 new hog rings.
NOTICE:
- **Be careful not to damage the cover.**
- **When installing the hog rings, take care to minimize wrinkles as much as possible.**

SE

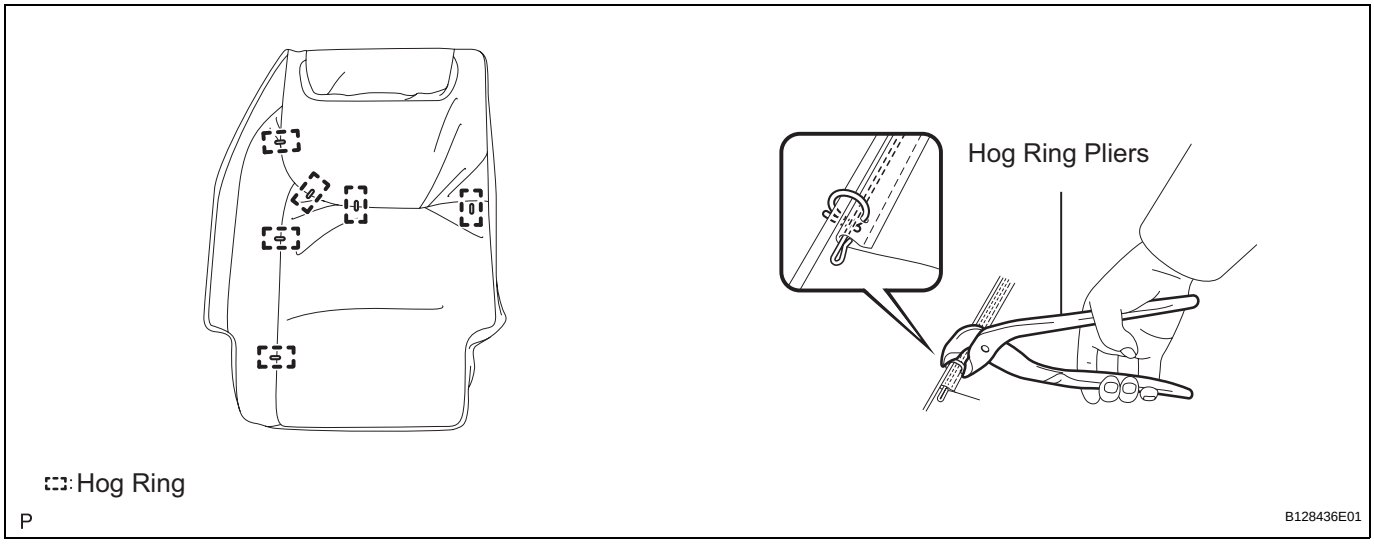

17. INSTALL NO. 2 SEATBACK COVER SUB-ASSEMBLY WITH PAD

18. INSTALL REAR NO. 2 SEAT HEADREST SUPPORT ASSEMBLY RH

19. INSTALL REAR NO. 2 SEAT HEADREST SUPPORT ASSEMBLY LH

20. INSTALL REAR SEAT HEADREST ASSEMBLY

21. INSTALL REAR SEAT RECLINING COVER RH

22. INSTALL REAR SEAT RECLINING COVER LH

23. INSTALL REAR NO. 2 SEAT COVER BEZEL

INSTALLATION

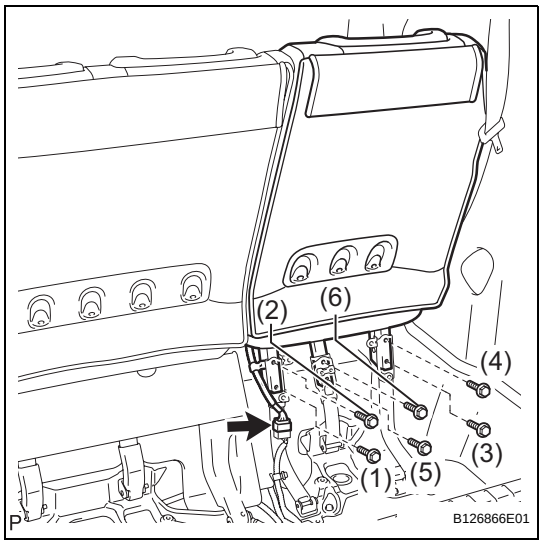

1. INSTALL REAR NO. 2 SEAT ASSEMBLY

(a) Lock the seat leg rear to the floor striker.

(b) Lock the seat leg front to the floor striker.

(c) Install the rear No. 2 seat assembly with the 6 bolts.
Torque: 19 N*m (194 kgf*cm, 14 ft.*lbf)
NOTICE:
Tighten the bolts in the order shown in the illustration.

(d) Connect the connector.

2. INSTALL NO. 2 SEAT HINGE COVER

3. INSTALL REAR SEAT LEG SIDE GARNISH SUB-ASSEMBLY

(a) Install 4 new clips to the rear seat leg side garnish sub-assembly.

SE

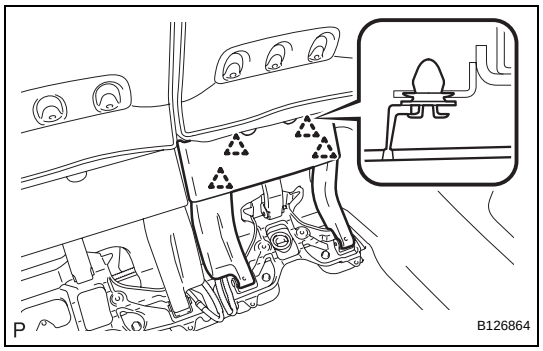

(b) Engage the 4 clips and install the rear seat leg side garnish sub-assembly.

4. INSTALL REAR NO. 2 SEAT LEG SIDE GARNISH SUB-ASSEMBLY

(a) Install 9 new clips to the rear No. 2 seat leg side garnish sub-assembly.

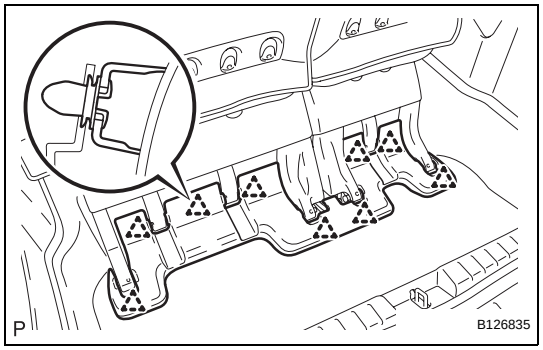

(b) Engage the 4 clips and install the rear No. 2 seat leg side garnish sub-assembly.

5. CONNECT CABLE TO NEGATIVE BATTERY TERMINAL

6. CHECK POWER REAR NO. 2 SEAT WITH STOWING FUNCTION (See page SE-149)

7. PERFORM INITIALIZATION

Some systems need initialization after reconnecting the cable to the negative battery terminal.