Park / Neutral Position Switch Circuit

DESCRIPTION

The fold seat control ECU receives signals from the Park/Neutral position switch and controls the seat stowing and return operations. If the shift lever is in any position other than P the seat cannot be operated. If the ignition switch is in ACC or IG the seat cannot be operated.

WIRING DIAGRAM

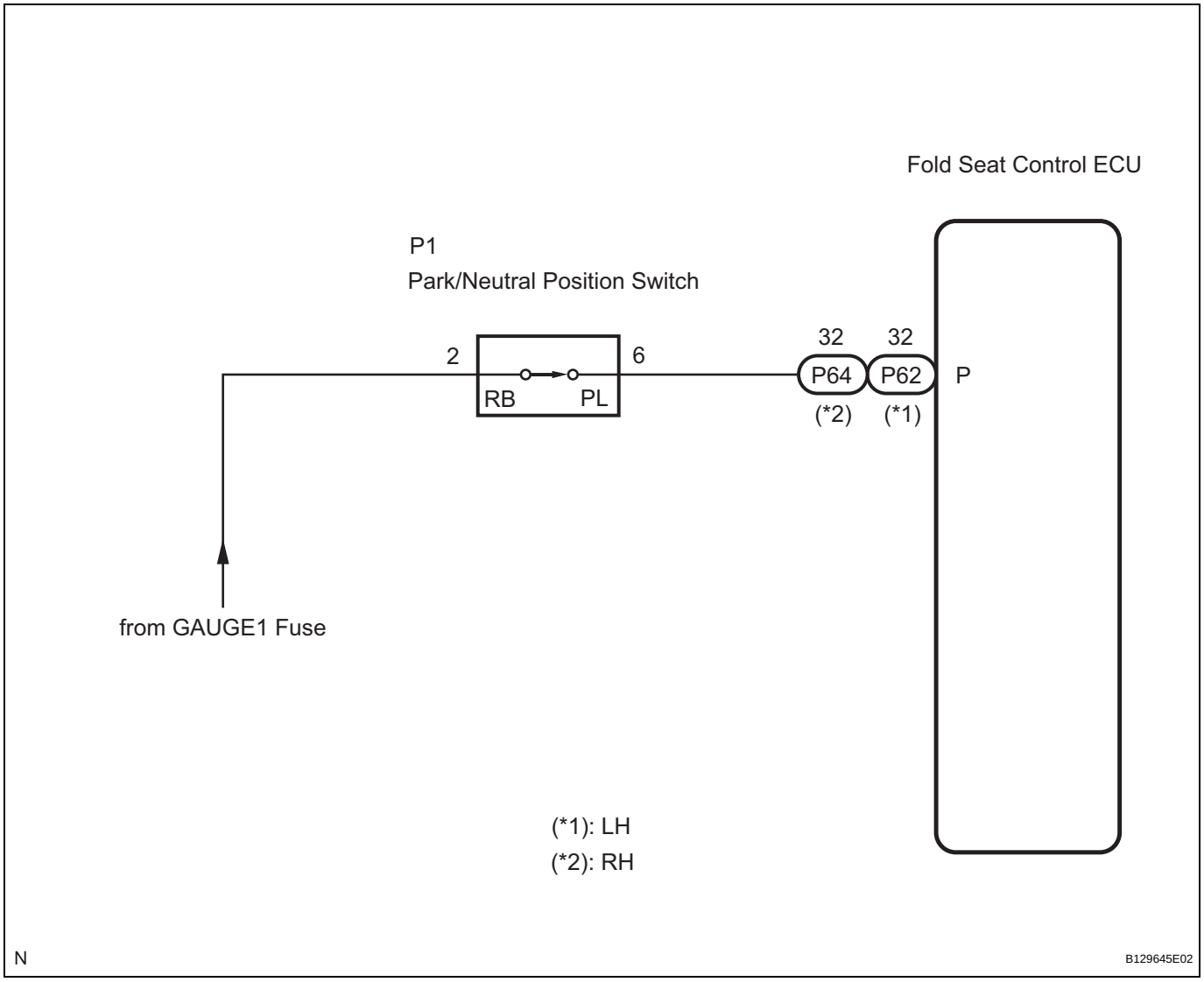

SE

INSPECTION PROCEDURE

1	INSPECT FOLD SEAT CONTROL ECU

Fold Seat Control ECU Connector Wire Harness View:

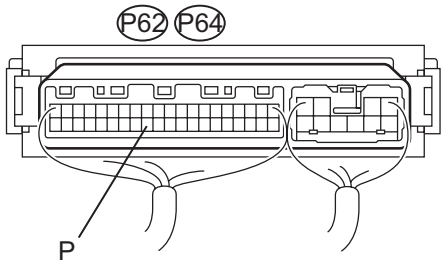

H

B129650E01

(a) Remove the fold seat control ECU with connectors still connected.
(b) Turn the ignition switch ON.
(c) Measure the voltage according to the value(s) in the table below.

Standard voltage:

LH side

Tester Connection (Symbols)	Condition	Specified Condition
P62-32 (P) - body ground	Park/Neutral position switch: P position	10 to 14 V
P62-32 (P) - body ground	Park/Neutral position switch: except P position	Below 2 V

RH side

Tester Connection (Symbols)	Condition	Specified Condition
P64-32 (P) - body ground	Park/Neutral position switch: P position	10 to 14 V
P64-32 (P) - body ground	Park/Neutral position switch: except P position	Below 2 V

OK → **PROCEED TO NEXT CIRCUIT INSPECTION SHOWN IN PROBLEM SYMPTOMS TABLE**

NG

2 CHECK HARNESS AND CONNECTOR (FOLD SEAT CONTROL ECU - PARK/NEUTRAL POSITION SWITCH)

Park/Neutral Position Swich Connector Front View:

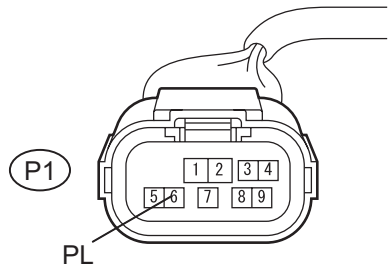

Fold Seat Control ECU Connector Wire Harness View:

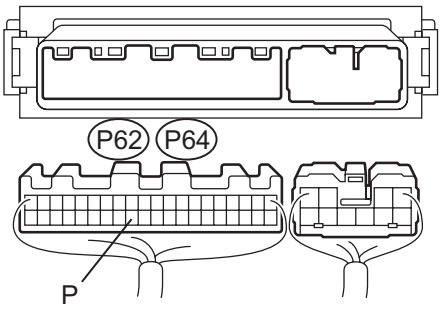

H

B129663E01

(a) Disconnect the connector from the park/neutral position switch.
(b) Disconnect the connectors from the fold seat control ECU.
(c) Measure the resistance according to the value(s) in the table below.

Standard resistance:

LH side

Tester Connection (Symbols)	Condition	Specified Condition
P62-32 (P) - P1-6 (PL)	Always	Below 1 Ω
P62-32 (P) - Body ground	Always	10 kΩ or higher

RH side

Tester Connection (Symbols)	Condition	Specified Condition
P64-32 (P) - P1-6 (PL)	Always	Below 1 Ω
P64-32 (P) - Body ground	Always	10 kΩ or higher

NG → **REPAIR OR REPLACE HARNESS OR CONNECTOR**

OK

3 INSPECT PARK/NEUTRAL POSITION SWITCH

Park/Neutral Position Switch Connector Front View:

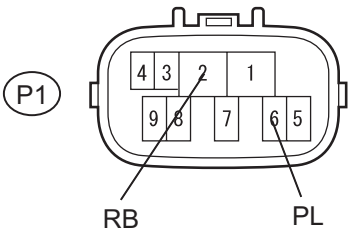

H

B129664E01

(a) Remove the park/neutral position switch.
(b) Measure the resistance according to the value(s) in the table below.

Standard resistance

Tester connection (Symbols)	Condition	Specified condition
P1-2 (RB) - P1-6 (PL)	Park/neutral position switch: except P position	10 kΩ or higher
P1-2 (RB) - P1-6 (PL)	Park/neutral position switch: P position	Below 1 Ω

NG → **REPLACE PARK/NEUTRAL POSITION SWITCH**

SE

OK

4	CHECK HARNESS AND CONNECTOR (PARK/NEUTRAL POSITION SWITCH - BATTERY)

Park/Neutral Position Switch Connector Front View:

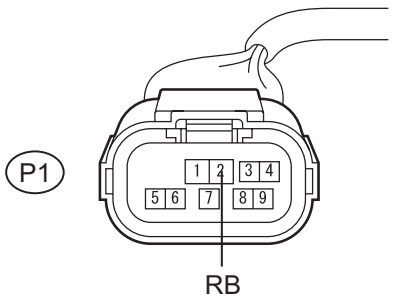

(a) Measure the voltage according to the value(s) in the table below.

Standard voltage

Tester connection (Symbols)	Condition	Specified condition
P1-2 (RB) - Body ground	Ignition switch: OFF	Below 1 V
P1-2 (RB) - Body ground	Ignition switch: ON	10 to 14 V

NG → **REPAIR OR REPLACE HARNESS OR CONNECTOR**

OK

REPLACE FOLD SEAT CONTROL ECU