REAR NO. 2 SEAT ASSEMBLY (w/ Power Stowing Function)

PRECAUTION

1. **Before operating the power rear no. 2 seat with stowing function, make sure that there is nothing in the path of the seat.**
   CAUTION:
   If someone or something is caught between the seat and other parts, injury or damage may result.
   (a) If the system detects that the folding motor is locked due to an object that is caught between the seat cushion and floor, a warning buzzer will sound for 10 seconds and the indicator on the fold seat switch will blink.
2. **Before operating the power rear no. 2 seat with stowing function, make sure that there is nothing on the seat.**
   HINT:
   If the system detects that an object is caught in the seat when the folding switch is operated, operating the stowing switch right after the detection will not cause the seat to move.
   (a) If the system detects that an object is caught between the seat cushion and seatback, a warning buzzer will sound for 10 seconds and the indicator on the fold seat switch will blink.

PARTS LOCATION

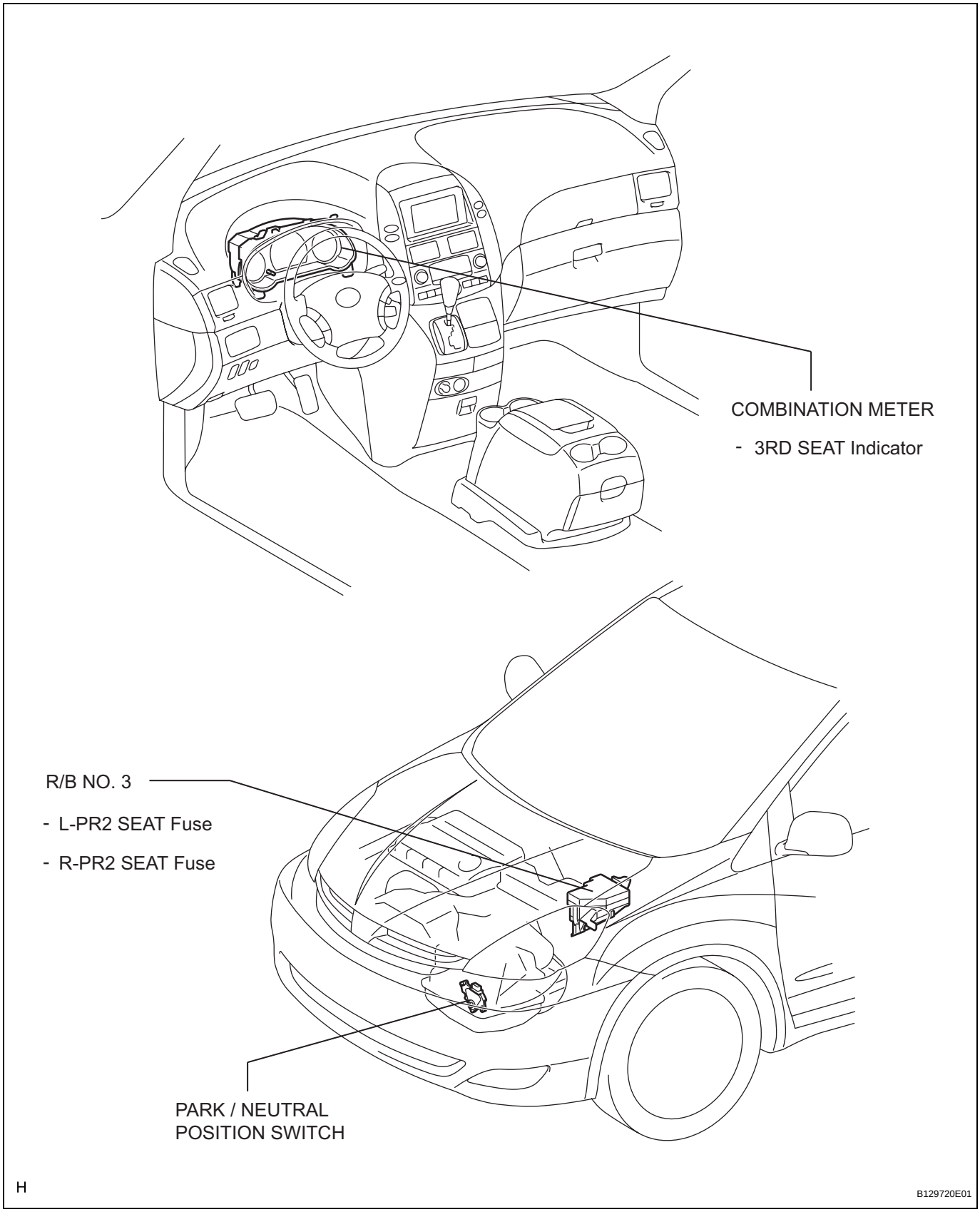

SE

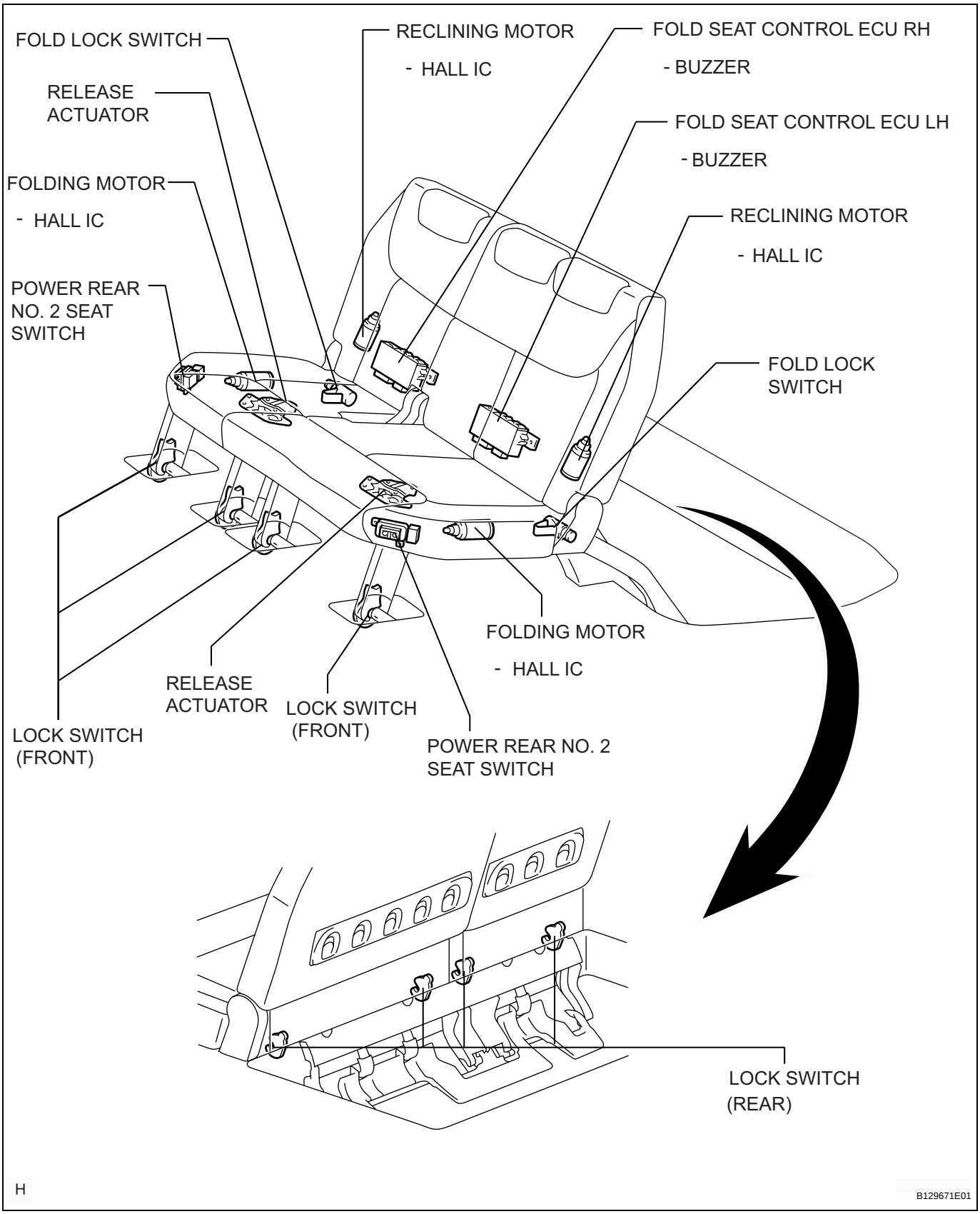
FOLD LOCK SWITCH
RELEASE ACTUATOR
FOLDING MOTOR
- HALL IC
POWER REAR NO. 2 SEAT SWITCH
RECLINING MOTOR
- HALL IC
FOLD SEAT CONTROL ECU RH
- BUZZER
FOLD SEAT CONTROL ECU LH
- BUZZER
RECLINING MOTOR
- HALL IC
FOLD LOCK SWITCH
FOLDING MOTOR
- HALL IC
RELEASE ACTUATOR
LOCK SWITCH (FRONT)
LOCK SWITCH (FRONT)
POWER REAR NO. 2 SEAT SWITCH
LOCK SWITCH (REAR)
H
B129671E01

SE

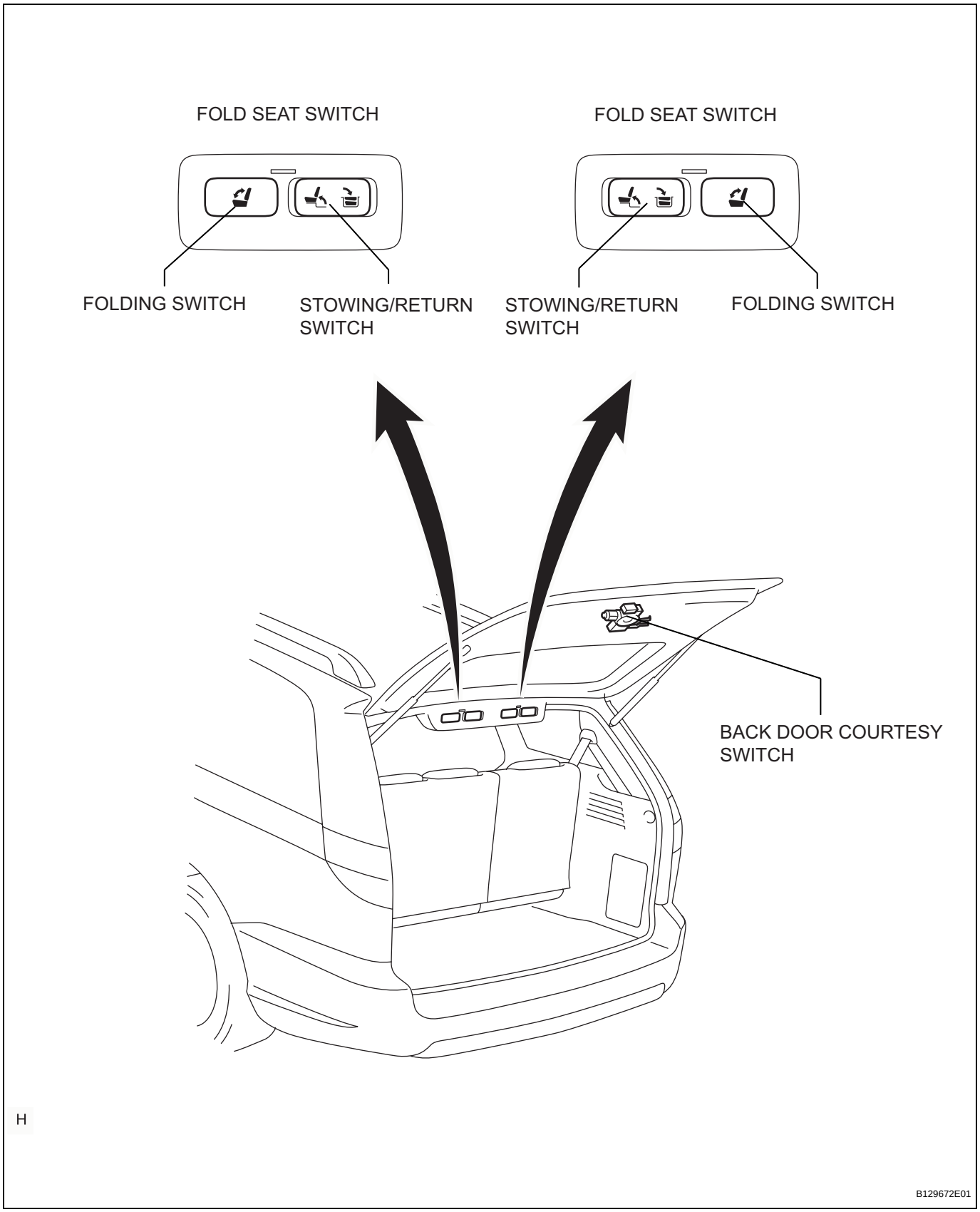
FOLD SEAT SWITCH
FOLD SEAT SWITCH
FOLDING SWITCH
STOWING/RETURN SWITCH
STOWING/RETURN SWITCH
FOLDING SWITCH
BACK DOOR COURTESY SWITCH
H
B129672E01

SE