Power Slide Door RH does not Operate When Satellite Switch is Pressed

DESCRIPTION

- The power slide door operates only when the power slide door main switch is ON (switch free: orange paint on the top of the switch appears). The power slide door ECU RH controls the power slide door RH, which activates the slide door motor to open / close the slide door.
- A request signal from the satellite switch for the power slide door RH is input to the the driver side junction block ECU, which then sends this request signal using a BEAN line to the power slide door ECU RH.
- A request signal from the power slide door control switch RH is directly input to the power slide door ECU RH.
- When the child lock is in the locked condition, the power slide door control switch RH is disabled, thus the power slide door RH is not activated by this switch.
- When the touch sensor has an open / short-circuit, closing of the power slide door is disabled.

NOTICE:

When disconnecting the negative (-) terminal cable of the battery or control motor and clutch, initialize the power slide door system (See page ED-15).

WIRING DIAGRAM

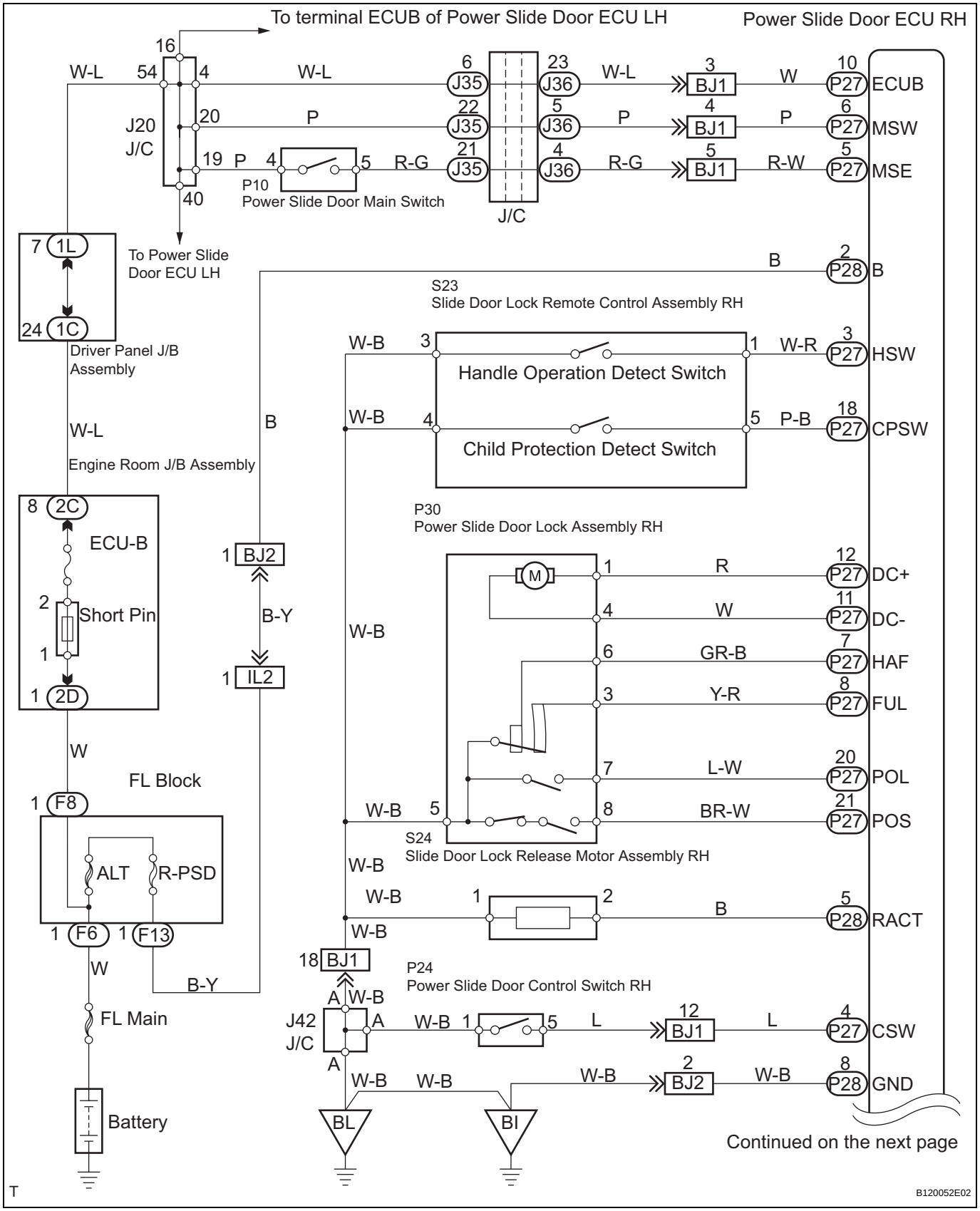

ED

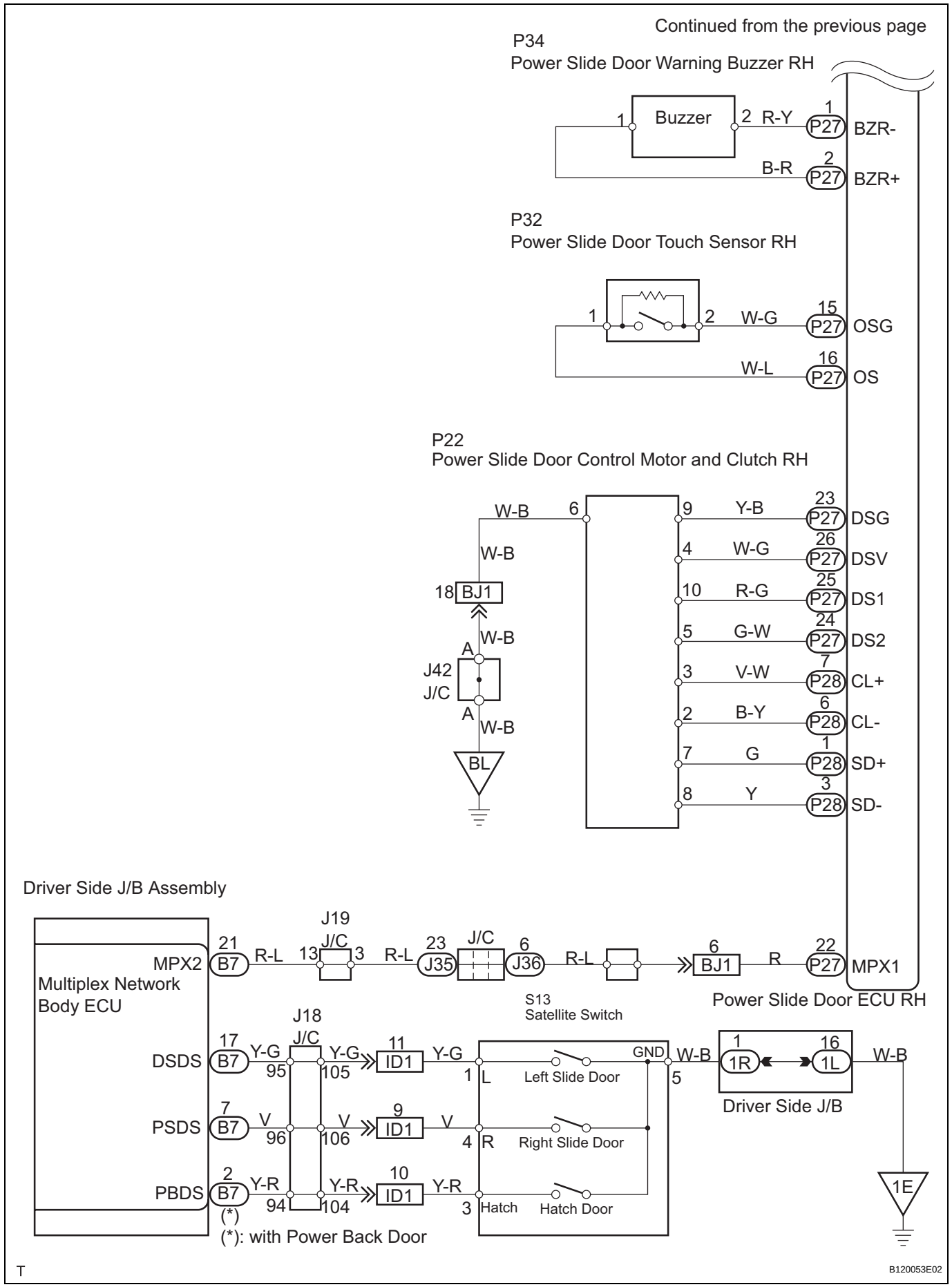
Continued from the previous page
P34
Power Slide Door Warning Buzzer RH
Buzzer
1
2
R-Y
P27
1
BZR-
B-R
P27
2
BZR+
P32
Power Slide Door Touch Sensor RH
1
2
W-G
P27
15
OSG
W-L
P27
16
OS
P22
Power Slide Door Control Motor and Clutch RH
W-B
6
9
Y-B
P27
23
DSG
W-B
4
W-G
P27
26
DSV
18
BJ1
10
R-G
P27
25
DS1
W-B
5
G-W
P27
24
DS2
A
J42
J/C
3
V-W
P28
7
CL+
2
B-Y
P28
6
CL-
A
W-B
7
G
P28
1
SD+
BL
8
Y
P28
3
SD-
Driver Side J/B Assembly
J19
J/C
MPX2
21
B7
R-L
13
3
R-L
23
J35
J/C
6
J36
R-L
6
BJ1
R
22
P27
MPX1
Multiplex Network
Body ECU
S13
Satellite Switch
Power Slide Door ECU RH
J18
J/C
DSDS
17
B7
Y-G
95
Y-G
105
11
ID1
Y-G
1
L
Left Slide Door
GND
5
W-B
1
1R
16
1L
W-B
PSDS
7
B7
V
96
V
106
9
ID1
V
4
R
Right Slide Door
Driver Side J/B
PBDS
2
B7
(*)
Y-R
94
Y-R
104
10
ID1
Y-R
3
Hatch
Hatch Door
1E
(*): with Power Back Door
T
B120053E02

INSPECTION PROCEDURE

1	BASIC INSPECTION

(a) Conditions necessary for the power slide door to open:
  (1) Power slide door main switch is in the ON position (switch free: orange paint on the top of the switch appears).
  (2) Slide door is unlocked (door lock position switch is in the ON position when the slide door is fully closed).
  (3) Shift lever is in the P position when the ignition switch is ON (When the ignition switch is OFF, the power slide door operates at any position of the shift lever.)

(b) Conditions necessary for the power slide door to close:
  (1) Power slide door main switch is in the ON position (switch free: orange paint on the top of the switch appears).
  (2) Slide door is between approximately the half-open position and the fully open position.
  (3) Slide door touch sensor is not damaged and deformed.

OK

2	INSPECT FUSE (ECU-B)

(a) Inspect the ECU-B fuse.

NG → REPLACE FUSE

OK

3	CHECK DTC

(a) Check for DTC B2223. DTC B2223 indicates a pulse sensor malfunction.
  (1) Without code outputs, proceed to A.
  (2) With code outputs, proceed to B.

B → GO TO DTC B2223

A

4	INSPECT COMMUNICATION FUNCTION OF LARGE-SCALE MULTIPLEX COMMUNICATION SYSTEM (BEAN)

(a) Use the intelligent tester to check for normal function of the multiplex communication system.

(1) (ECU unconnected, communication line malfunctioning) Without DTC B1214, B1215 or B1216 outputs, proceed to A.
(2) (ECU unconnected, communication line malfunctioning) With DTC B1214, B1215 or B1216 outputs, proceed to B.

B → **GO TO MULTIPLEX COMMUNICATION SYSTEM**

A

5 READ VALUE OF INTELLIGENT TESTER

(a) Using the intelligent tester, check the DATA LIST for proper functioning of the power slide door main switch.

OK (Power slide door ECU RH):

Item	Measurement Item / Display (Range)	Normal Condition	Diagnostic Note
PSD MAIN SW	Power slide door main SW / ON or OFF	ON: Orange paint on top of the switch appears OFF: Orange paint on top of the switch does not appear	-

OK → **Go to step 8**

NG

6 INSPECT POWER SLIDE DOOR MAIN SWITCH

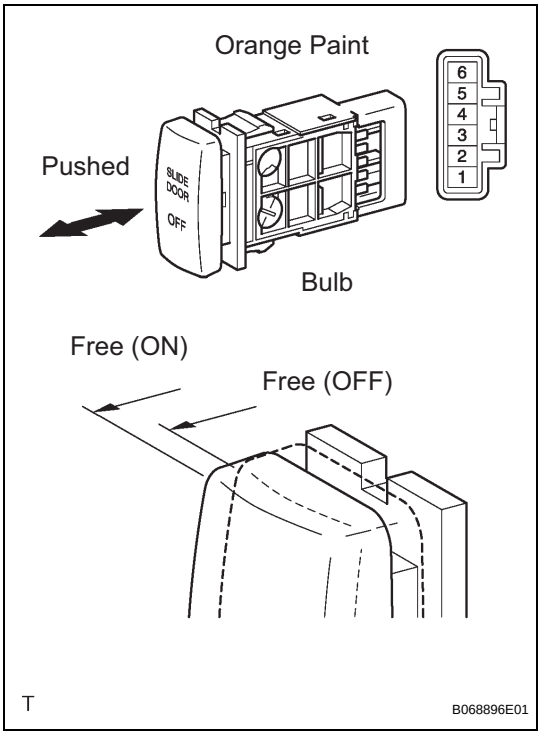

(a) Inspect the resistance of the main switch.
Resistance

Terminal No.	Condition	Specified Condition
4 - 5	Free (ON)	Below 1 Ω
	Pushed (OFF)	10 kΩ or higher

HINT:
If the switch does not illuminate, it will not affect the ON / OFF function of the switch. For the illumination check, refer to SLIDE DOOR SYSTEM (See page ED-207).

NG → **REPLACE POWER SLIDE DOOR MAIN SWITCH**

OK

ED

7	CHECK WIRE HARNESS (POWER SLIDE DOOR MAIN SWITCH - POWER SLIDE DOOR ECU RH)

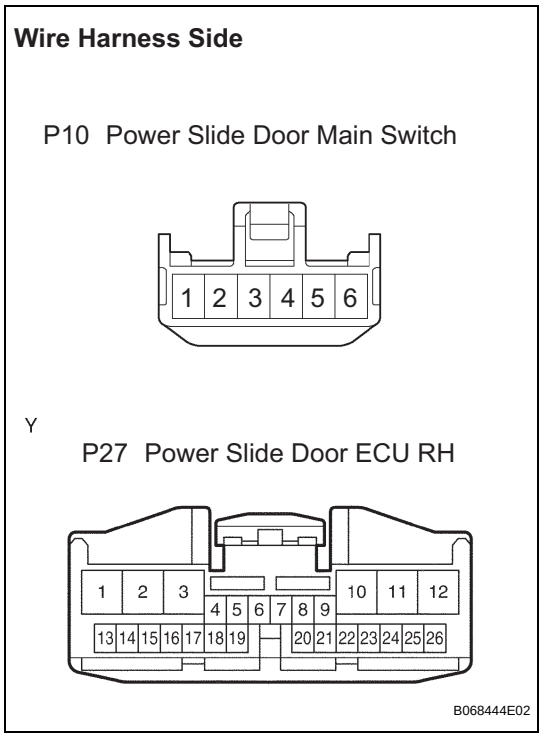

(a) Disconnect the P10 switch and P27 ECU connectors.
(b) Check the resistance between the wire harness side connectors.
Resistance (Check for open circuit)

Terminal No.	Specified Condition
P10-4 - P27-6 (MSW)	Below 1 Ω
P10-5 - P27-5 (MSE)	

(c) Check the resistance between the P10 switch connector and body ground.
Resistance (Check for short circuit)

Terminal No.	Specified Condition
P10-4 - Body ground	10 kΩ or higher

NG → **REPAIR OR REPLACE HARNESS AND CONNECTOR**

OK

REPLACE POWER SLIDE DOOR ECU RH

8	CHECK SWITCH OPERATION

(a) If the power slide door does not respond to using the satellite switch, proceed to A.
(b) If the power slide door does not respond to using the power slide door control switch (child lock is set at UNLOCK.), proceed to B.
HINT:
If the power slide door cannot operate using the power slide door control switch even when the child lock is locked, there may be a malfunction in the child lock switch. In this case, check the handle switch circuit (See page ED-69).

B → **Go to step 11**

A

9 INSPECT SATELLITE SWITCH

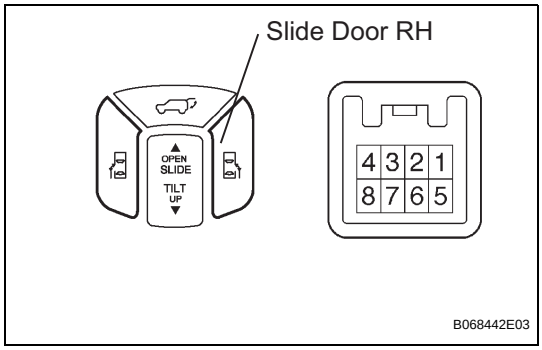

(a) Check the resistance of the RH switch.
Resistance

Terminal No.	Condition	Specified Condition
4 - 5	Free	10 kΩ or higher
	Pushed	Below 1 Ω

HINT:
If the switch does not illuminate, it will not affect the ON / OFF function of the switch. For the illumination check, refer to SLIDE DOOR SYSTEM (See page ED-6).

NG → **REPLACE SATELLITE SWITCH**

OK

10 CHECK WIRE HARNESS (SATELLITE SWITCH - DRIVER SIDE J/B, BODY GROUND)

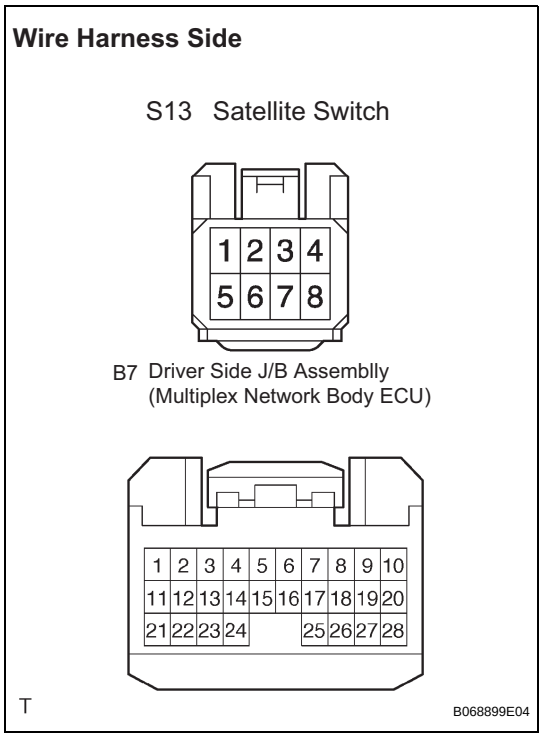

(a) Disconnect the S13 switch and B7 ECU connectors.
(b) Check the resistance between the wire harness side connectors.
Resistance (Check for open circuit)

Terminal No.	Specified Condition
S13-4 (R) - B7-7 (PSDS)	Below 1 Ω

(c) Check the resistance between the S13 switch connector and body ground.
Resistance (Check for open circuit)

Terminal No.	Specified Condition
S13-5 (GND) - Body ground	Below 1 Ω

OK → **Go to step 14**

NG

REPAIR OR REPLACE HARNESS AND CONNECTOR

11	READ VALUE OF INTELLIGENT TESTER

(a) Using the intelligent tester, check the DATA LIST for proper functioning of the power slide door control switch RH.

OK (Power slide door ECU RH):

Item	Measurement Item / Display (Range)	Normal Condition	Diagnostic Note
B PILLAR SW*	Power slide door control switch* signal / ON or OFF	ON: Power slide door control switch* is pushed OFF: Power slide door control switch* is not pushed	-

* "B PILLAR SW" appears on the display of the intelligent tester, however the name of the part corresponding to the display of the tester is "Power slide door control switch".

OK → **Go to step 14**

NG

12	INSPECT POWER SLIDE DOOR CONTROL SWITCH RH

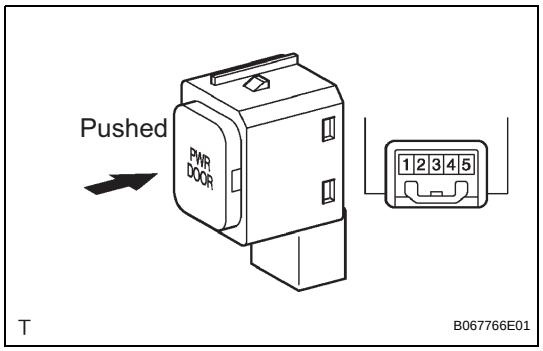

(a) Inspect the resistance of the switch.

Resistance

Terminal No.	Condition	Specified Condition
1 - 5	Free	10 kΩ or higher
	Pushed	Below 1 Ω

HINT:
If the switch does not illuminate, it will not affect the ON / OFF function of the switch. For the illumination check, refer to SLIDE DOOR SYSTEM (See page ED-208).

NG → **REPLACE POWER SLIDE DOOR CONTROL SWITCH RH**

OK

ED

13	CHECK WIRE HARNESS (POWER SLIDE DOOR CONTROL SWITCH RH - POWER SLIDE DOOR ECU RH)

Wire Harness Side

P24
Power Slide Door Control Switch RH

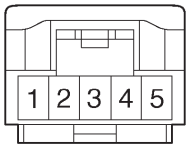

P27
Power Slide Door ECU RH

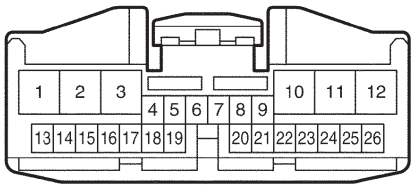

B068445E02

(a) Disconnect the P24 switch and P27 ECU connectors.
(b) Check the resistance between the wire harness side connectors.
Resistance (Check for open circuit)

Terminal No.	Specified Condition
P24-5 - P27-4 (CSW)	Below 1 Ω

(c) Check the resistance between the P24 switch connector and body ground.
Resistance (Check for open circuit)

Terminal No.	Specified Condition
P24-1 - Body ground	Below 1 Ω

NG → **REPAIR OR REPLACE HARNESS AND CONNECTOR**

OK

REPLACE POWER SLIDE DOOR ECU RH

14	READ VALUE OF INTELLIGENT TESTER

(a) Using the intelligent tester, check the DATA LIST for proper functioning of the power slide door touch sensor RH.

OK (Power slide door ECU RH):

Item	Measurement Item / Display (Range)	Normal Condition	Diagnostic Note
PSD TOUCH SEN	Power slide door touch sensor / OFF, ON or OPEN	OFF: Power slide door touch sensor is free ON: Power slide door touch sensor is pressed OPEN: Power slide door touch sensor is opened	-

OK → **Go to step 17**

NG

ED

15 INSPECT POWER SLIDE DOOR TOUCH SENSOR RH

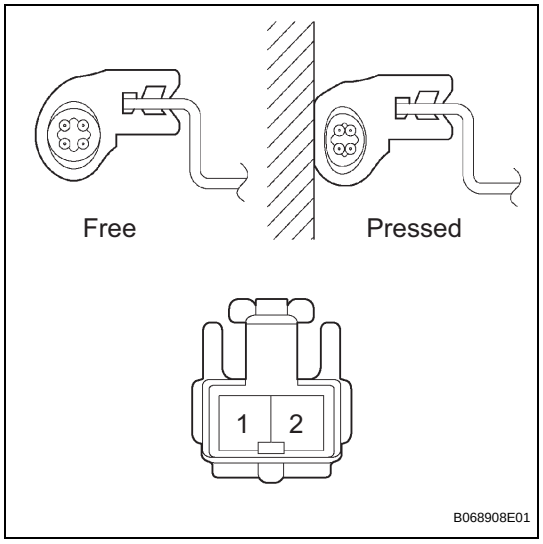

(a) Check the resistance of the sensor.
Resistance

Terminal No.	Condition	Specified Condition
1 - 2	Free	Approx. 1 kΩ
	Pressed	Less than 100 Ω

NG → **REPLACE POWER SLIDE DOOR TOUCH SENSOR RH**

OK

16 CHECK WIRE HARNESS (POWER SLIDE DOOR TOUCH SENSOR RH - POWER SLIDE DOOR ECU RH)

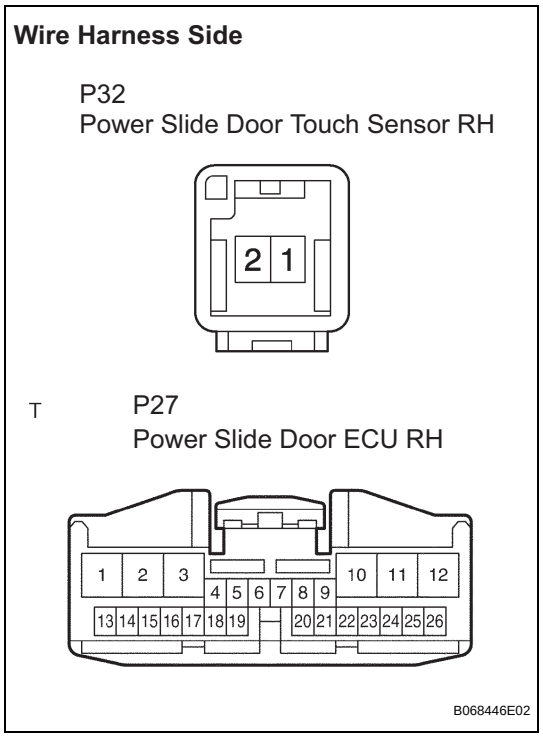

(a) Disconnect the P32 sensor and P27 ECU connectors.
(b) Check the resistance between the wire harness side connectors.
Resistance (Check for open circuit)

Terminal No.	Specified Condition
P32-1 - P27-16 (OS)	Below 1 Ω
P32-2 - P27-15 (OSG)	

NG → **REPAIR OR REPLACE HARNESS AND CONNECTOR**

OK

REPLACE POWER SLIDE DOOR ECU RH

ED

17	PERFORM ACTIVE TEST BY INTELLIGENT TESTER

(a) Select the ACTIVE TEST and then check that the power slide door control motor and clutch RH operates.
HINT:
During the ACTIVE TEST, the intelligent tester sends a signal to the power slide door ECU RH to drive the motor and clutch. If the motor and clutch operates, the motor and clutch itself and the wire harness between the motor and clutch and the power slide door ECU RH are considered to be functioning normally.

OK (Power slide door ECU RH):

Item	Test Details	Diagnostic Note
PSD MOTOR	Power slide door control motor is in operation OFF / FORWARD / REVERAE	Clutch is OFF while power slide door motor is operating
PSD CLUTCH	Power slide door control clutch is release OFF / ON	Power slide door motor is OFF when clutch is ON

OK → **Go to step 20**

NG

18	INSPECT SLIDE DOOR CONTROL MOTOR AND CLUTCH ASSEMBLY RH

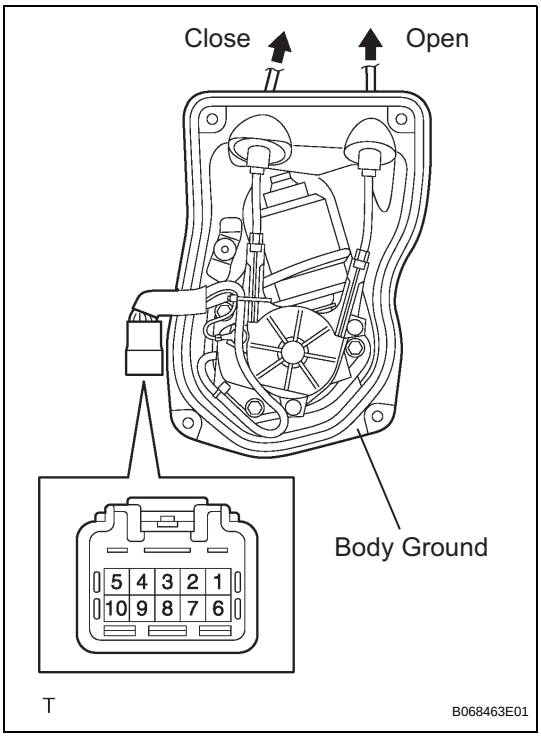

(a) Remove the motor and clutch.
(b) Connect the battery positive (+) lead to terminal 3 and battery negative (-) terminal lead to terminal 2.
(c) Apply battery voltage to the terminals and check the motor operation.
OK

Measurement Condition	Specified Condition
Battery positive (+) → Terminal 8 Battery negative (-) → Terminal 7	**Open**
Battery positive (+) → Terminal 7 Battery negative (-) → Terminal 8	**Close**

(d) Check the resistance of the clutch terminals.
Resistance

Terminal No.	Specified Condition
2 - 3	**4.0 Ω**
6 - Body ground	**Below 1 Ω**

(e) Reinstall the motor and clutch with the connector connected.

ED

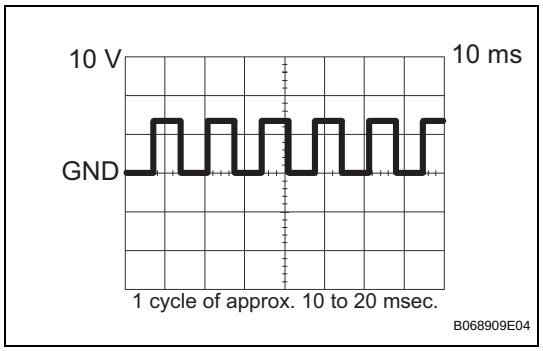

(f) Check the pulse of the pulse sensor.

(1) Using an oscilloscope, check the pulse generated when the door is manually opened and closed.

Reference

Terminal	Tool setting	Vehicle condition
5 - 9, 9 - 10	10 V/DIV., 10 ms/DIV.	Door moving

HINT:

A cycle of the pulse changes between approx. 10 to 20 msec. according to the speeds that the slide door is moving.

NOTICE:

When disconnecting the control motor and clutch, initialize the power slide door system (See page ED-15).

NG → **REPLACE SLIDE DOOR CONTROL MOTOR AND CLUTCH ASSEMBLY RH**

OK

19	CHECK WIRE HARNESS (POWER SLIDE DOOR CONTROL MOTOR - POWER SLIDE DOOR ECU RH)

Wire Harness Side

P22
Power Slide Door Control Motor and Clutch RH

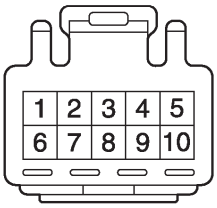

T

P27 Power Slide Door ECU RH

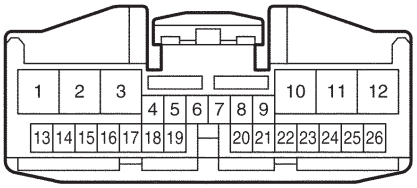

P

P28 Power Slide Door ECU RH

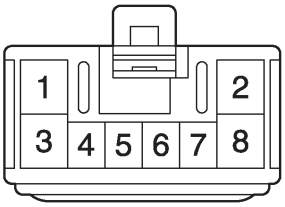

T

B068440E02

(a) Disconnect the P22 motor and clutch, the P27 and P28 ECU connectors.
(b) Check the resistance between the wire harness side connectors.

Resistance (Check for open circuit)

Terminal No.	Specified Condition
P22-9 - P27-23 (DSG)	Below 1 Ω
P22-4 - P27-26 (DSV)	
P22-10 - P27-25 (DS1)	
P22-5 - P27-24 (DS2)	
P22-3 - P28-7 (CL+)	
P22-2 - P28-6 (CL-)	
P22-7 - P28-1 (SD+)	
P22-8 - P28-3 (SD-)	

NG → **REPAIR OR REPLACE WIRE HARNESS AND CONNECTOR**

OK

REPLACE POWER SLIDE DOOR ECU RH

ED

20	READ VALUE OF INTELLIGENT TESTER

(a) Using the intelligent tester, check the DATA LIST for proper functioning of the switches listed below.

OK (Power slide door ECU RH):

Item	Measurement Item / Display (Range)	Normal Condition	Diagnostic Note
POLE* SW	Power slide door lock pawl* position switch signal / ON or OFF	ON: Slide door is unlatched OFF: Slide door is latched	-

Item	Measurement Item / Display (Range)	Normal Condition	Diagnostic Note
HALF SW	Power slide door lock half latch switch signal / ON or OFF	ON: Slide door is not completely closed OFF: Slide door is closed	-
FULL SW	Power slide door lock full latch switch signal / ON or OFF	ON: Slide door is open OFF: Slide door is closed	-
CLOSER POS SW	Power slide door lock closer position switch signal / ON or OFF	ON: Closer is not in the initial position and inside / outside handle is not pulled OFF: Closer is in the initial position and inside / outside handle is pulled	-

* "POLE" appears on the display of the intelligent tester, however the name of the part corresponding to the display of the tester is "pawl".

OK → **Go to step 23**

NG

21 INSPECT POWER SLIDE DOOR LOCK ASSEMBLY RH

NG → **REPLACE POWER SLIDE DOOR LOCK ASSEMBLY RH**

OK

22 CHECK WIRE HARNESS (POWER SLIDE DOOR LOCK ASSEMBLY RH - POWER SLIDE DOOR ECU RH)

NG → **REPAIR OR REPLACE HARNESS AND CONNECTOR**

OK

REPLACE POWER SLIDE DOOR ECU RH

23 PERFORM ACTIVE TEST BY INTELLIGENT TESTER

(a) Select the ACTIVE TEST and then check that the slide door lock release motor RH operates.
HINT:
During the ACTIVE TEST, the intelligent tester sends a signal to the power slide door ECU RH to drive the release motor. If the release motor operates, the release motor itself and the wire harness between the release motor and power slide ECU RH are considered to be functioning normally.

OK (Power slide door ECU RH):

Item	Test Details	Diagnostic Note
RELEASE ACT	Slide door lock release motor is release OFF / ON	-

OK → Go to step 26

NG

24 INSPECT SLIDE DOOR LOCK RELEASE MOTOR ASSEMBLY

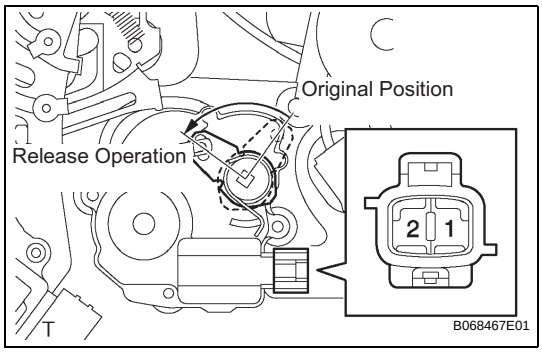

(a) Apply battery voltage and inspect operation of the release motor.
OK

Measurement Condition	Specified Condition
Battery positive (+) → Terminal 2 Battery negative (-) → Terminal 1	Release operation
No battery voltage is applied	Original position

NG → **REPLACE SLIDE DOOR LOCK RELEASE MOTOR ASSEMBLY**

OK

25 CHECK WIRE HARNESS (SLIDE DOOR LOCK RELEASE MOTOR - POWER SLIDE DOOR ECU RH)

Wire Harness Side

S24 Slide Door Lock Release Motor Assembly RH

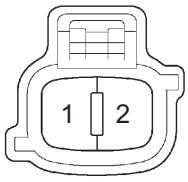

P28 Power Slide Door ECU RH

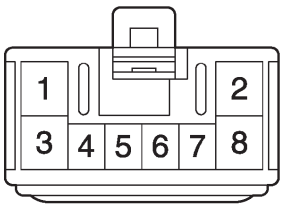

T
B068448E02

(a) Disconnect the S24 motor and P28 ECU connectors.
(b) Check the resistance between the wire harness side connectors.
Resistance (Check for open circuit)

Terminal No.	Specified Condition
S24-2 - S28-5 (RACT)	Below 1 Ω

(c) Check the resistance between the S22 motor connector and body ground.
Resistance (Check for open circuit)

Terminal No.	Specified Condition
S24-1 - Body ground	Below 1 Ω

NG → **REPAIR OR REPLACE HARNESS AND CONNECTOR**

ED

OK

26 REPLACE POWER SLIDE DOOR ECU RH

(a) Check the power slide door for normal OPEN / CLOSE operation.

NG → **REPLACE DRIVER SIDE JUNCTION BLOCK ASSEMBLY (MULTIPLEX NETWORK BODY ECU)**

OK

SYSTEM NORMAL