OPERATION CHECK

NOTICE:
Inspection should be started after conforming that the items listed in the "CUSTOMIZE PARAMETER" for the power slide door system have defaulted to the initial settings (See page ED-15).

1. CHECK OPENING OPERATION

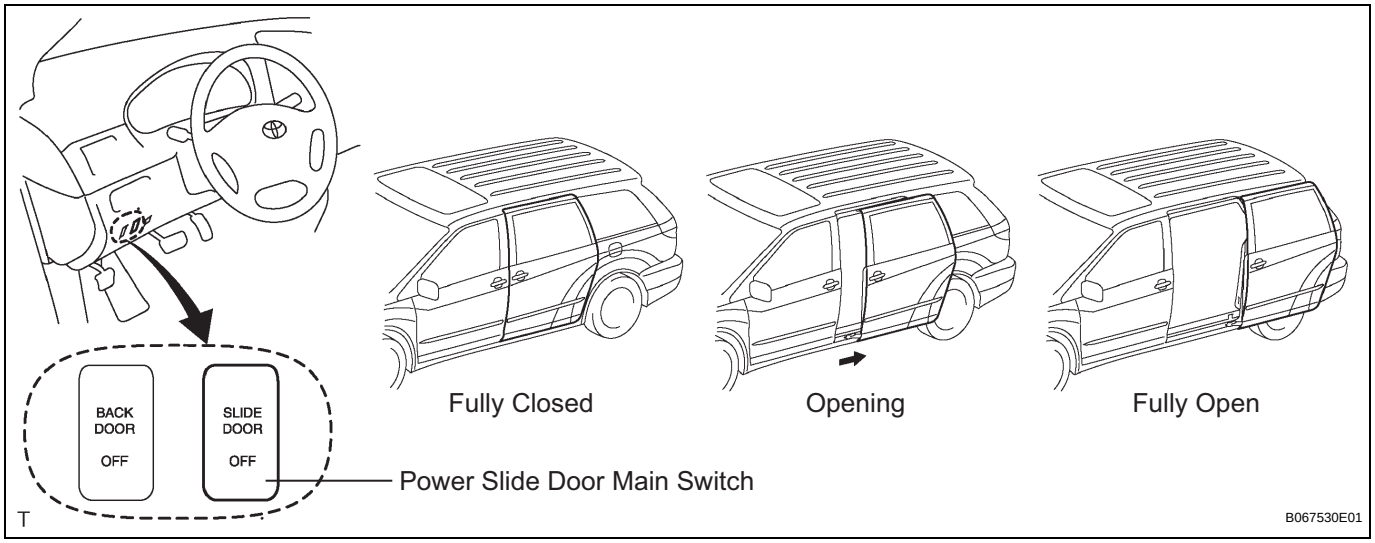

(a) Conditions necessary for the power slide door to open:
  (1) Power slide door main switch is in the ON position.
  (2) Slide door is positioned between the fully closed position and the half-open position (When the slide door is fully closed, the door must be unlocked).
  (3) Shift lever is in the P position when the ignition switch is ON (When the ignition switch is OFF, power slide door can operate in any position of the shift lever).
  (4) No key is inserted into the ignition key cylinder when the transmitter is used.
  (5) Fuel lid is closed.

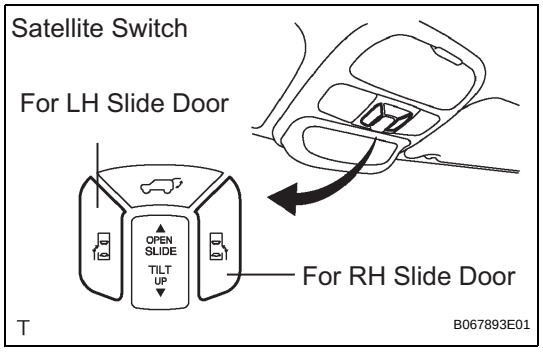

(b) Press the satellite switch for the power slide door.
  (1) Check that the power slide door opens when the switch has been pressed for more than 0.8 seconds.
  HINT:
  The power slide door can operate even when the child lock is ON.
  (2) Check that the power slide door reverses operation and moves to the fully closed position when the same switch is pressed again during opening.

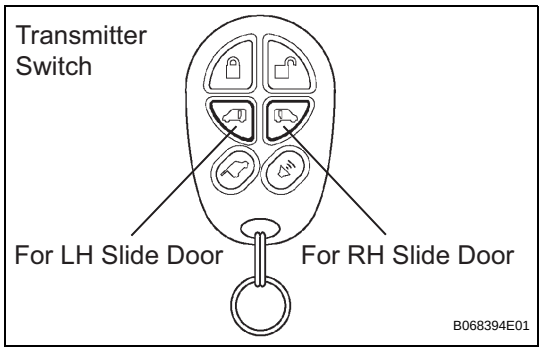

(c) Press the transmitter switch for the power slide door.
(1) Check that the power slide door opens when the switch has been pressed for more than 0.8 seconds.
HINT:
The power slide door can operate even when the child lock is ON.
(2) Check that the power slide door reverses operation and moves to the fully closed position when the same switch is pressed again during opening.

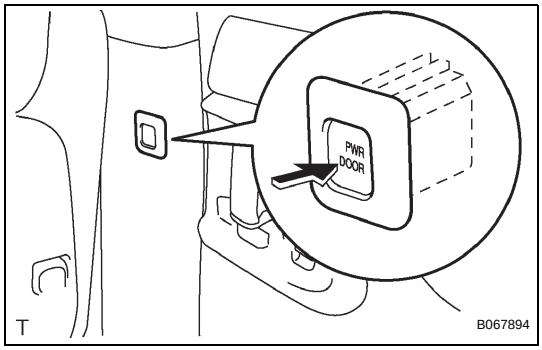

(d) Press the power slide door control switch.
(1) Check that the power slide door opens when the switch is pressed.
HINT:
The power slide door can operate only when the child lock is OFF.
(2) Check that the power slide door reverses operation and moves to the fully closed position when the same switch is pressed again during opening.

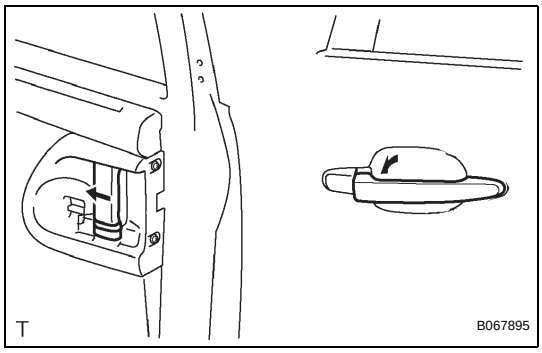

(e) Pull the outside / inside handle for the power slide door.
(1) Check that the power slide door opens when the handle is pulled.
HINT:
- For the inside handle, the power slide door can operate only when the child lock is OFF.
- For the outside handle, the power slide door can operate even when the child lock is ON.

(2) Check that the power slide door reverses operation and moves to the fully closed position when the same handle is pulled again during opening.

2. CHECK CLOSING OPERATION

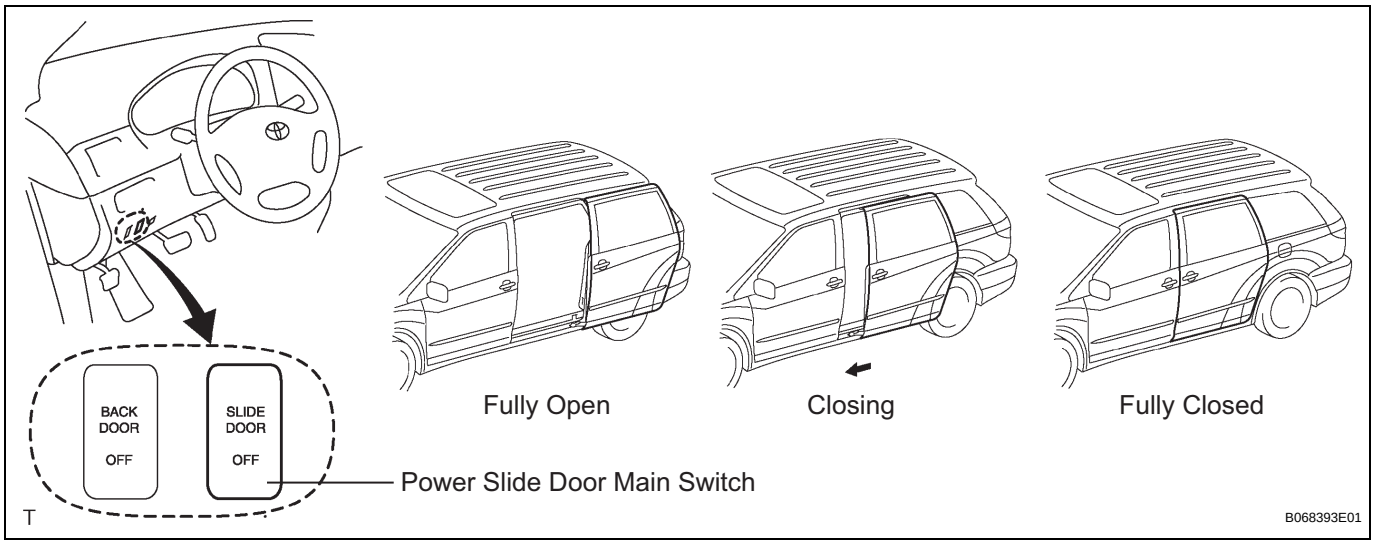

ED

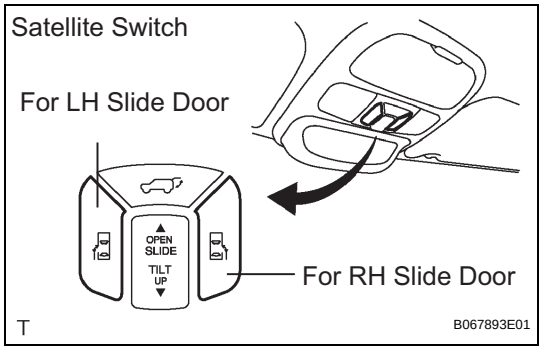

(a) Conditions necessary for the power slide door to close:
  (1) Power slide door main switch is in the ON position.
  (2) Slide door is positioned between the fully open position and the half-open position.
  (3) No key is inserted into the ignition key cylinder when the transmitter is used.

(b) Press the satellite switch for the power slide door.
  (1) Check that the power slide door closes when the switch has been pressed for more than 0.8 seconds.
  HINT:
  The power slide door can operate even when the child lock is ON.

(c) Check that the power slide door reverses operation and moves to the fully open position when the same switch is pressed again during closing.

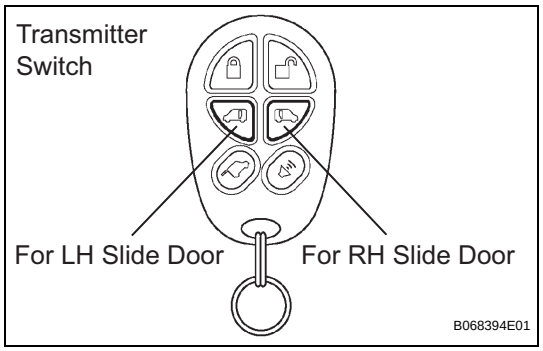

(d) Press the transmitter switch for the power slide door.
  (1) Check that the power slide door closes when the switch has been pressed for more than 0.8 seconds.
  HINT:
  The power slide door can operate even when the child lock is ON.
  (2) Check that the power slide door reverses operation and moves to the fully open position when the same switch is pressed again during closing.

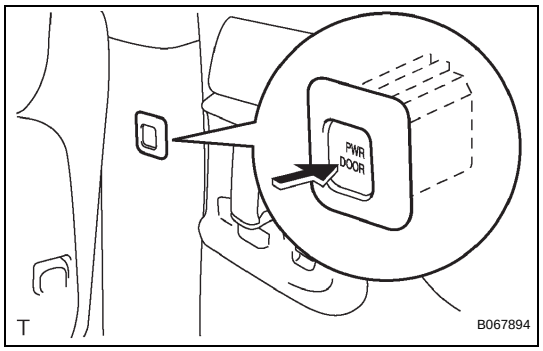

(e) Press the power slide door control switch.
  (1) Check that the power slide door closes when the switch is pressed.
  HINT:
  The power slide door can operate only when the child lock is OFF.
  (2) Check that the power slide door reverses operation and moves to the fully open position when the same switch is pressed again during closing.

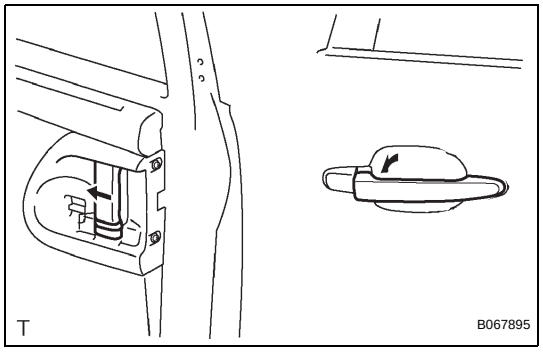

(f) Pull the outside / inside handle for the power slide door.
  (1) Check that the power slide door closes when the handle is pulled.
  (2) Check that the power slide door reverses operation and moves to the fully open position when the same handle is pulled again during closing.

3. CHECK JAM PROTECTION FUNCTION

HINT:

- The power slide door control motor and clutch detects changes in the operating speed of the slide door while the power slide door is moving. If a change in the operation speed is out of the normal range, it will be judged to be a jam and foreign object detection in the direction that the power slide door is moving and the movement.
- When the power slide door touch sensor built into the front end of the slide door is compressed, it is judged to be a jam and foreign object detection in the direction that the power slide door is moving and the power slide door movement will reverse.
- The power slide door touch sensor operates only while the slide door is closing. It does not operate while the slide door is opening.

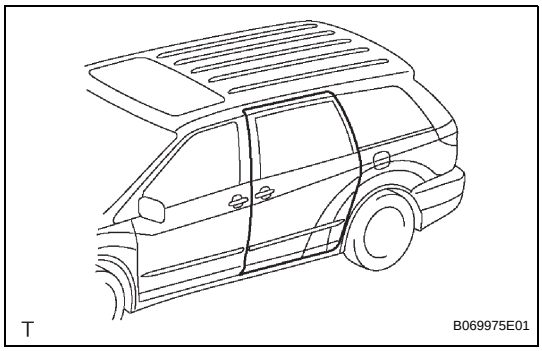

(a) [a] Check the jam protection function while the power slide door is closing.

CAUTION:

Do not check this function using a part of your body such as your hand. Also pay thorough attention that nothing gets caught by accident in this process.

(1) Fully open the slide door.

(2) Press the switch that operates the power slide door to activate it to close.

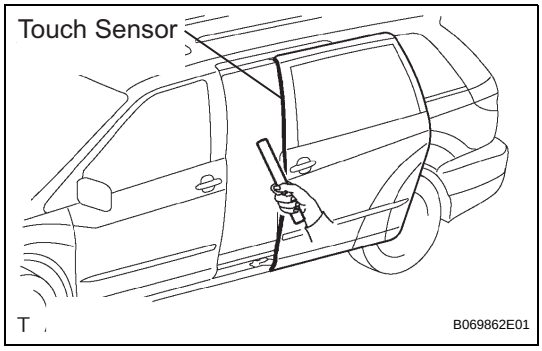

(3) While the slide door is closing, press the touch sensor using the handle of a hammer or the equivalent.

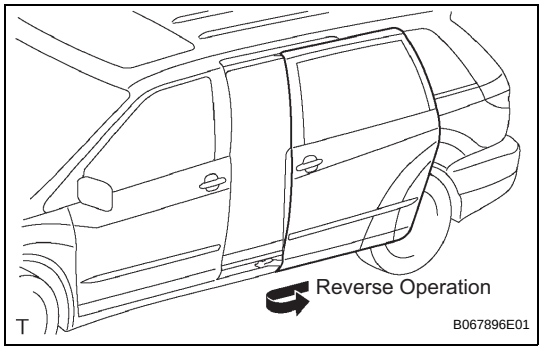

(4) Check that the jam protection function is immediately activated and the power slide door reverses operation to the fully open position.

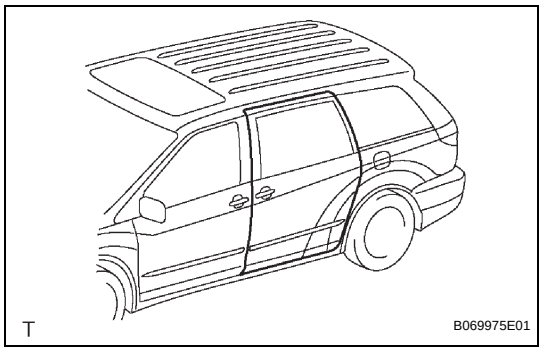

(b) [b] Check the jam protection function while the power slide door is opening.
CAUTION:
Do not check this function using a part of your body such as your hand. Also pay thorough attention that nothing gets caught by accident in this process.
(1) Fully open the slide door.
(2) Press the switch that operates the power slide door to activate it to close.

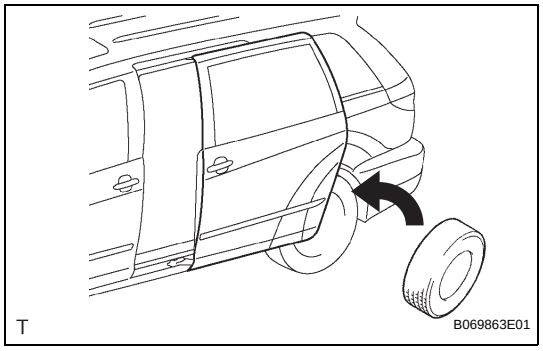

(3) While the slide door is opening, hold the slide door by using a tire or equivalent, as shown in the illustration, so that the operating speed decreases.

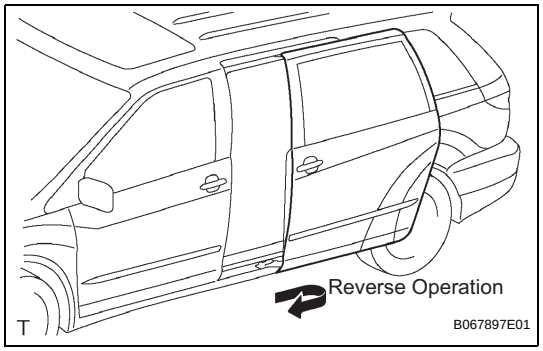

(4) Check that the jam protection function is immediately activated and the power slide door reverses operation to the fully closed position.

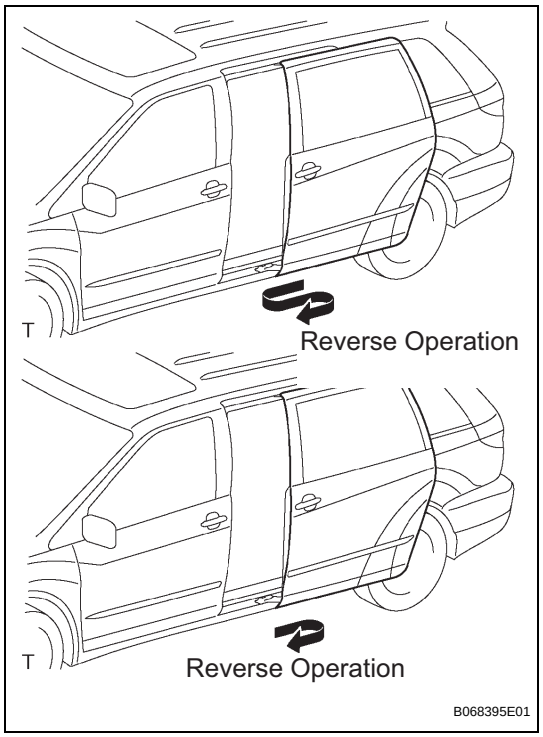

(c) Check operation of the power slide door when the jam protection function is consecutively activated.
(1) Check that power slide door operation is cancelled and switched to manual operation mode (not electrically controlled) when the jam protection function has been activated 2 or more consecutive times and when the 2nd or most recent activation has occurred during closing.
HINT:
Refer to procedure [a] and [b] for the method that activates the jam protection function.
NOTICE:
In order to restore the power slide door system to normal operation mode, perform one of the following: manually close the slide door fully, press the satellite switch for the power slide door or the power slide door control switch again.

ED

4. CHECK FUEL LID STOPPER SYSTEM

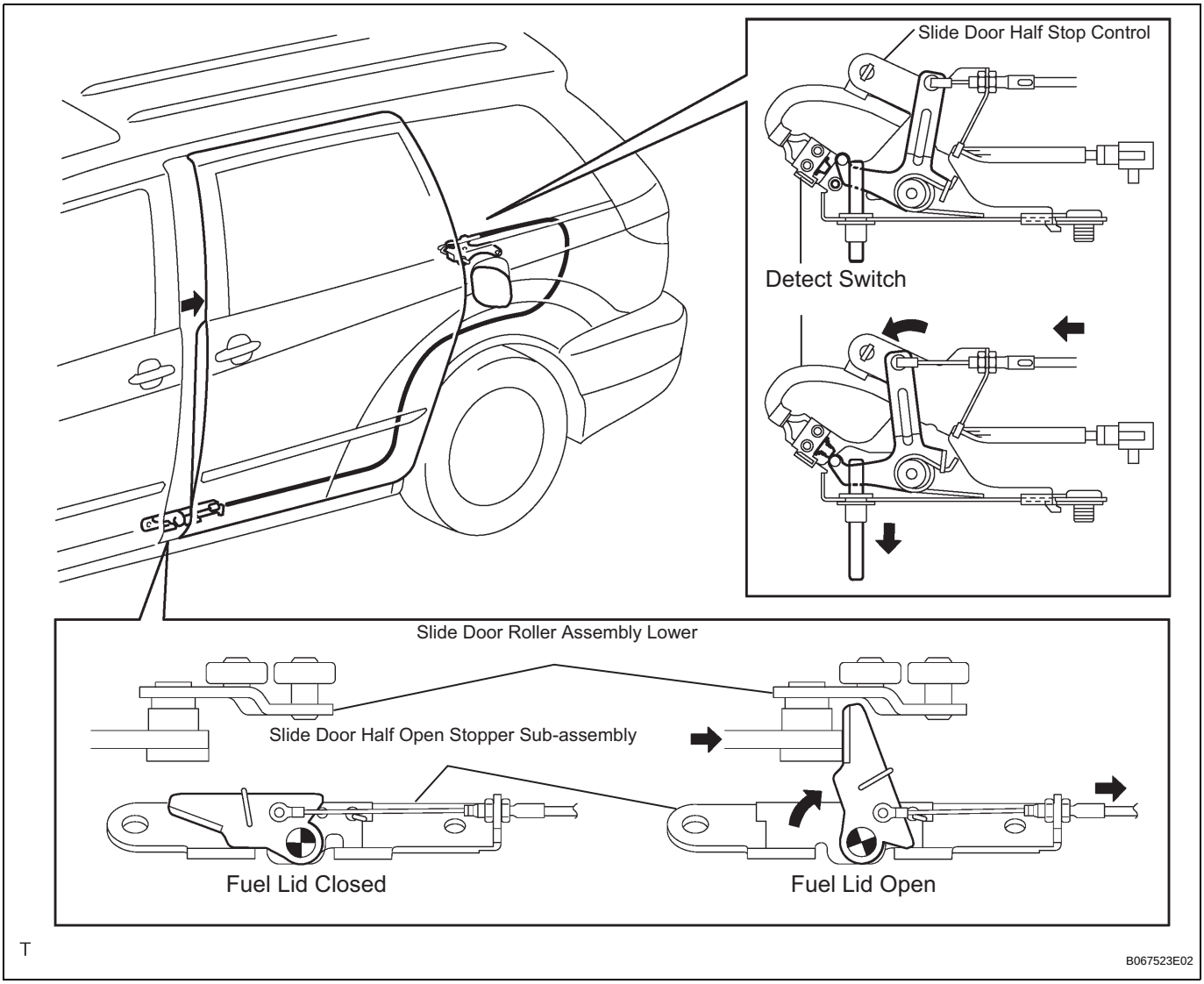

HINT:

- The fuel lid stopper system operates against the slide door LH only because the fuel lid is placed on the LH side of the vehicle.
- When the fuel lid is open, the slide door half stop control pulls the cable in order to operate the open stopper so that the slide door will not strike against the fuel lid.
- The detect switch built into the slide door half stop control detects that the fuel lid is open.

(a) Check that the slide door cannot be opened when the fuel lid is open.

(b) Check that the power slide door is switched to manual operation mode when the fuel lid is opened while the power slide door is moving.
NOTICE:
In order to restore the power slide door system to normal operation mode, perform one of the following: manually close the slide door fully, press the satellite switch for the power slide door or the power slide door control switch again.

5. SLIDE DOOR HALF-OPEN STOPPER SYSTEM

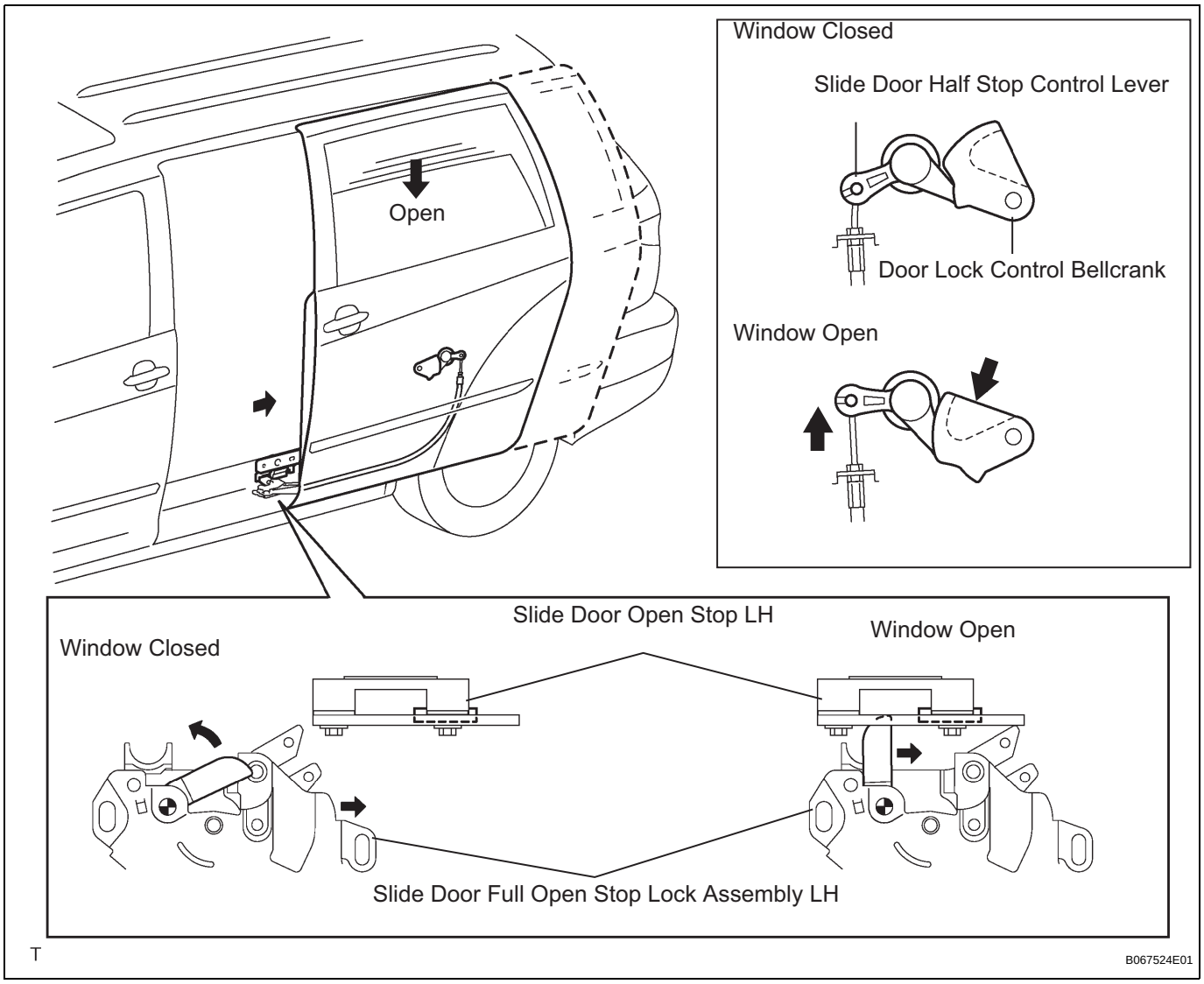

HINT:
Linked with operation of the rear power window regulator, the control lever and bellcrank operates and pulls the cable, which then operates the half-open stopper so that the slide door stops. This prevents the slide door from opening fully.

(a) Check that the slide door is forced to stop at approx. 105 mm (4.13 in.) from the fully open position when the window is open 150 mm (5.91 in.) or more.

6. SLIDE DOOR FULL OPEN STOP LOCK

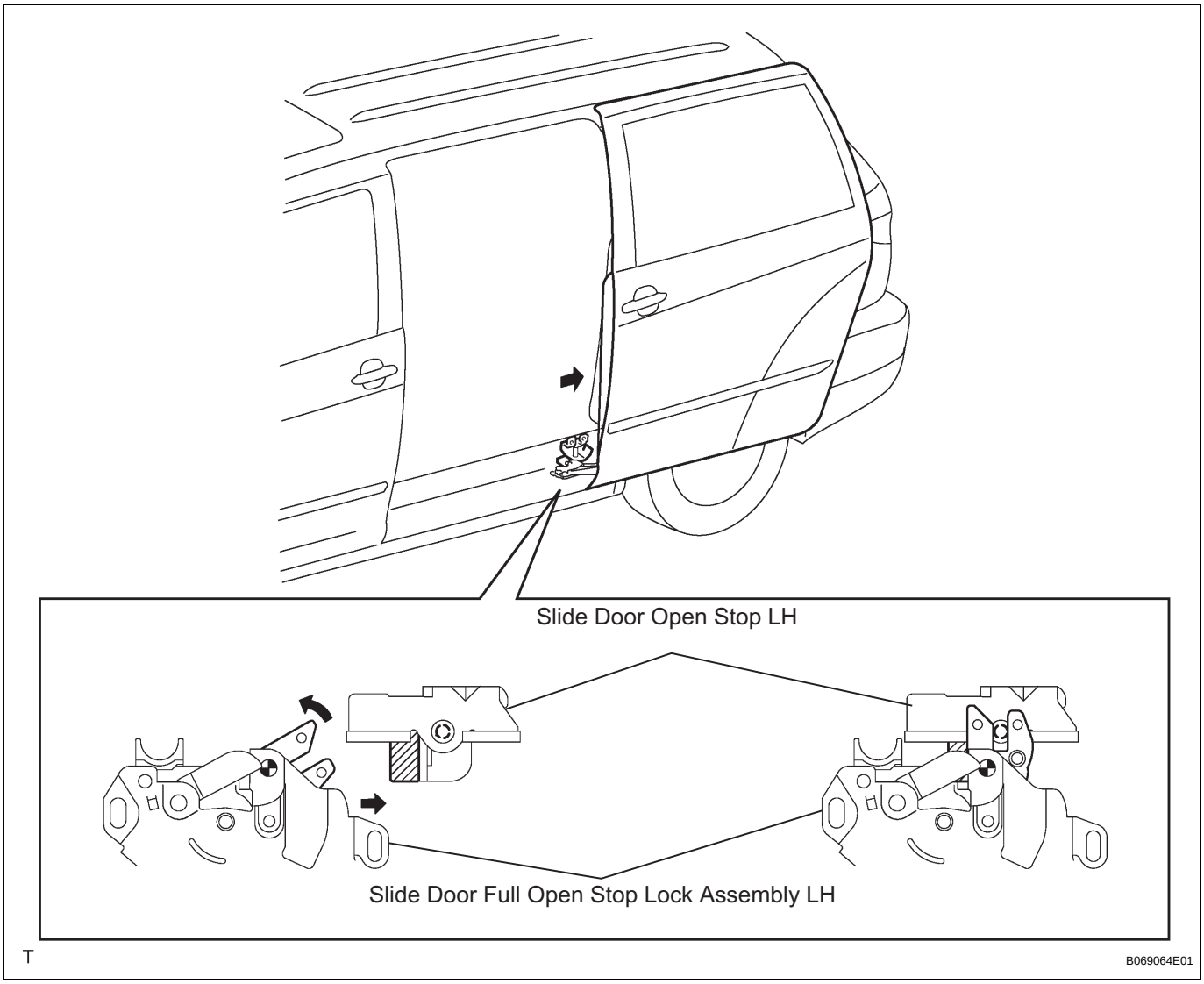

(a) Check that the slide door is fixed at the fully open position by the slide door full open stop lock when fully open.

7. CHECK WARNING BUZZER

(a) Check the warning buzzer sounding function that notifies that the power slide door is open or is opening while the vehicle is moving (when the shift lever is moved into any position except the P position).

(1) While the slide door is open, check that the warning buzzer sounds at a cycle of 0.3 seconds if the shift lever is moved into any position except the P position with the ignition switch ON.

(2) Turn the ignition switch ON and move the shift lever into any position except the P position. Check that the warning buzzer sounds at a cycle of 0.3 seconds when the power slide door system is activated to open using the switches or handles.

(3) Check that the warning buzzer stops sounding when the slide door is fully closed or the shift lever is moved into the P position.