Jam Protection Function Activates During Power Slide Door RH Operation

DESCRIPTION

- It may be caused by ill-fitting slide door, faulty touch sensor or faulty pulse sensor.
- The power slide door ECU activates the slide motor to open / close the power slide door, thus controlling the power slide door operation. For jam and foreign object detection, the power slide door system uses the pulse sensor built into the slide motor and the touch sensor installed in the front side of the slide door.
- When the touch sensor comes in contact with an object while the slide door is closing, the resistance of the touch sensor changes, which is monitored by the power slide door ECU. If a change in resistance is detected, the ECU will judge it to be a jam and foreign object detection in the direction that the power slide door is moving and reverse slide motor rotation. The touch sensor operates only while the slide door is closing. It does not operate while the slide door is opening.
- The pulse sensor detects changes in the operating speed of the slide door while the slide door is operating. When the sensor detects a change in the operating speed, the pulse from the sensor also changes, which is monitored by the power slide door ECU. If there is a pulse change detected, the ECU will judge it to be a jam and foreign object detection in the direction that the power slide door is moving and reverse slide motor rotation.
- If a jam and foreign object detection by the touch sensor and the pulse sensor has occurred 2 or more consecutive times and if the 2nd or most recent detection has occurred during closing, then the power slide door ECU will cancel automated slide door operation and switch the slide door to manual operation mode (not electrically controlled). In order to return the power slide door system to normal operation mode, perform either of the following: manually close the slide door fully or press the satellite switch for the power slide door or the power slide door control switch again (reset operation).

WIRING DIAGRAM

See page ED-50.

INSPECTION PROCEDURE

1	**CHECK DTC**

(a) Check for DTC B2223. DTC B2223 indicates a pulse sensor malfunction.
  (1) Without code outputs, proceed to A.
  (2) With code outputs, proceed to B.

B → **GO TO DTC B2223**

A

2	**VISUALLY CHECK**

(a) Check for foreign objects on the sliding area.

NG → **REMOVE OBSTACLES AND RE-CHECK SLIDE OPERATION**

OK

ED

3	MANUAL OPERATION

(a) Turn OFF* the power slide door main switch in order to locate the area where reverse operation has been triggered.

* OFF is a condition that orange paint on the top of the switch does not appear.

(b) Move the slide door manually, and check to make sure no obstacles are present (no extra resistance) around the reverse operation area and that the slide door smoothly operates.

NG → **ADJUST FITTING CONDITION OF SLIDE DOOR**

OK

4	READ VALUE OF INTELLIGENT TESTER

(a) Using the intelligent tester, check the DATA LIST for proper functioning of power slide door touch sensor RH.

OK (Power slide door ECU RH):

Item	Measurement Item / Display (Range)	Normal Condition	Diagnostic Note
PSD TOUCH SEN	Power slide door touch sensor / OFF, ON or OPEN	ON: Power slide door touch sensor is free OFF: Power slide door touch sensor is pressed OPEN: Power slide door touch sensor is opened	-

OK → **Go to step 7**

NG

5	INSPECT POWER SLIDE DOOR TOUCH SENSOR RH

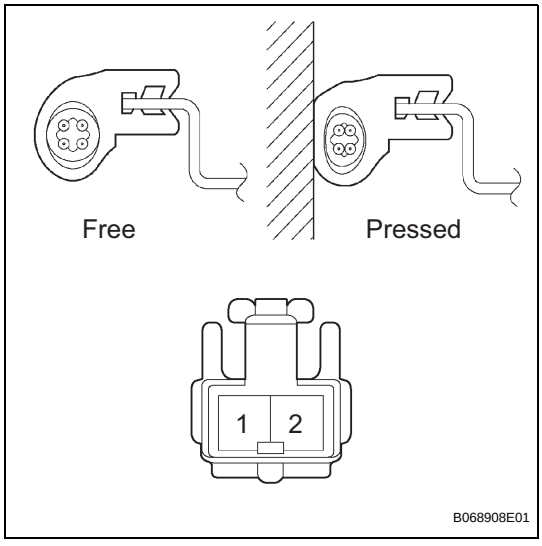

(a) Inspect the resistance of the sensor.

Resistance

Terminal No.	Condition	Specified Condition
1 - 2	Free	Approx. 1 kΩ
	Pressed	Less than 100 Ω

NG → **REPLACE POWER SLIDE DOOR TOUCH SENSOR RH**

ED

OK

6	CHECK WIRE HARNESS (POWER SLIDE DOOR TOUCH SENSOR RH - POWER SLIDE DOOR ECU RH)

Wire Harness Side

P32
Power Slide Door Touch Sensor RH

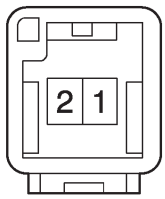

T P27
Power Slide Door ECU RH

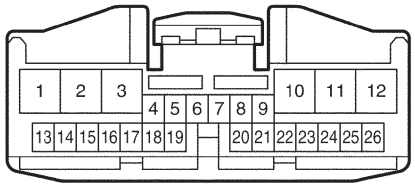

B068446E02

(a) Disconnect the P32 sensor and the P27 ECU connectors.
(b) Check the resistance between the wire harness side connectors.

Resistance (Check for open circuit)

Terminal No.	Specified Condition
P32-1 - P27-16 (OS)	Below 1 Ω
P32-2 - P27-15 (OSG)	

NG → **REPAIR OR REPLACE HARNESS AND CONNECTOR**

OK

REPLACE POWER SLIDE DOOR ECU RH

7	PERFORM ACTIVE TEST BY INTELLIGENT TESTER

(a) Select the ACTIVE TEST and then check that the power slide door control motor and clutch RH operates.
HINT:
During the ACTIVE TEST, the intelligent tester sends a signal to the power slide door ECU RH to drive the motor and clutch. If the motor and clutch operates, the motor and clutch itself and the wire harness between the motor and clutch and the power slide door ECU are considered to be functioning normally.

OK (Power slide door ECU RH):

Item	Test Details	Diagnostic Note
PSD MOTOR	Power slide door motor is operation OFF / FORWARD / REVERSE	Clutch is OFF while power slide door motor is operating
PSD CLUTCH	Power slide door clutch is release OFF / ON	Power slide door motor is OFF when clutch is ON

OK → **REPLACE POWER SLIDE DOOR ECU RH**

ED

NG

8 INSPECT SLIDE DOOR CONTROL MOTOR AND CLUTCH ASSEMBLY RH

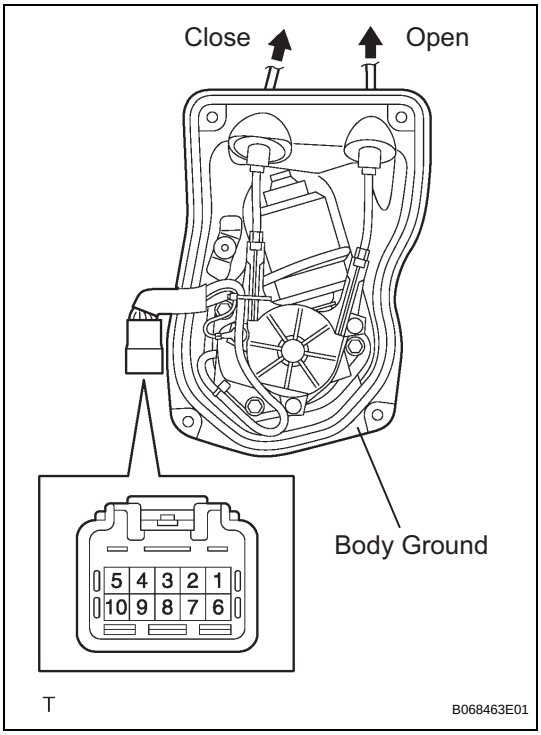

(a) Remove the motor and clutch.

(b) Connect the battery positive (+) lead to terminal 3 and battery negative (-) terminal lead to terminal 2.

(c) Apply battery voltage to the terminals and check the motor operation.

OK

Measurement Condition	Specified Condition
Battery positive (+) → Terminal 8 Battery negative (-) → Terminal 7	Open
Battery positive (+) → Terminal 7 Battery negative (-) → Terminal 8	Close

(d) Check the resistance of the clutch terminals.

Resistance

Terminal No.	Specified Condition
2 - 3	4.0 Ω
6 - Body ground	Below 1 Ω

(e) Reinstall the motor and clutch with the connector connected.

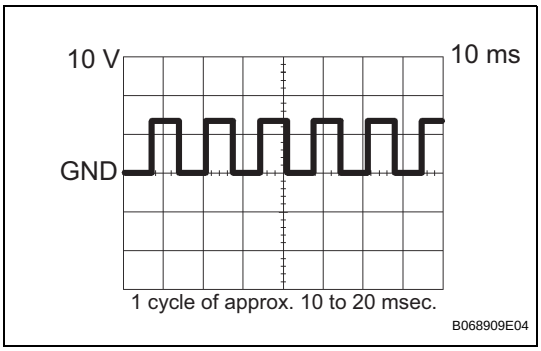

(f) Check the pulse of the pulse sensor.

(1) Using an oscilloscope, check the pulse generated when the door is manually opened and closed.

Reference

Terminal	Tool setting	Vehicle condition
5 - 9, 9 - 10	10 V/DIV., 10 ms/DIV.	Door moving

HINT:

A cycle of the pulse changes between approx. 10 to 20 msec. according to the speeds that the slide door is moving.

NOTICE:

When disconnecting the control motor and clutch, initialize the power slide door system (See page ED-15).

NG → **REPLACE SLIDE DOOR CONTROL MOTOR AND CLUTCH ASSEMBLY RH**

OK

ED

9	CHECK WIRE HARNESS (SLIDE DOOR CONTROL MOTOR AND CLUTCH - POWER SLIDE DOOR ECU)

Wire Harness Side

P22
Power Slide Door Control Motor and Clutch RH

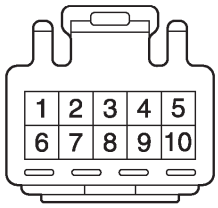

T

P27 Power Slide Door ECU RH

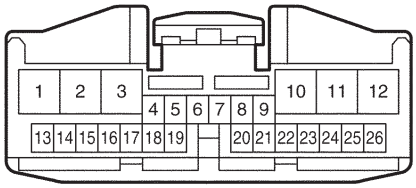

P

P28 Power Slide Door ECU RH

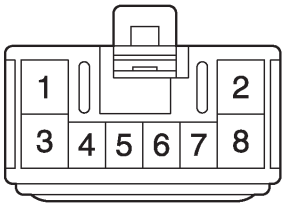

T

B068440E02

(a) Disconnect the P22 motor and clutch, the P27 and P28 ECU connectors.
(b) Check the resistance between the wire harness side connectors.

Resistance (Check for open circuit)

Terminal No.	Specified Condition
P22-9 - P27-23 (DSG)	Below 1 Ω
P22-4 - P27-26 (DSV)	
P22-10 - P27-25 (DS1)	
P22-5 - P27-24 (DS2)	
P22-3 - P28-7 (CL+)	
P22-2 - P28-6 (CL-)	
P22-7 - P28-1 (SD+)	
P22-8 - P28-3 (SD-)	

NG → **REPAIR OR REPLACE HARNESS AND CONNECTOR**

OK →

REPLACE POWER SLIDE DOOR ECU RH