Back Door Closer does not Operate

DESCRIPTION

The power back door ECU controls the back door closer system. In response to the signals output from the switches related to the back door lock, the back door latch activates the closer motor.
HINT:
The back door closer system operates regardless of whether the power back door main switch is ON / OFF.

WIRING DIAGRAM

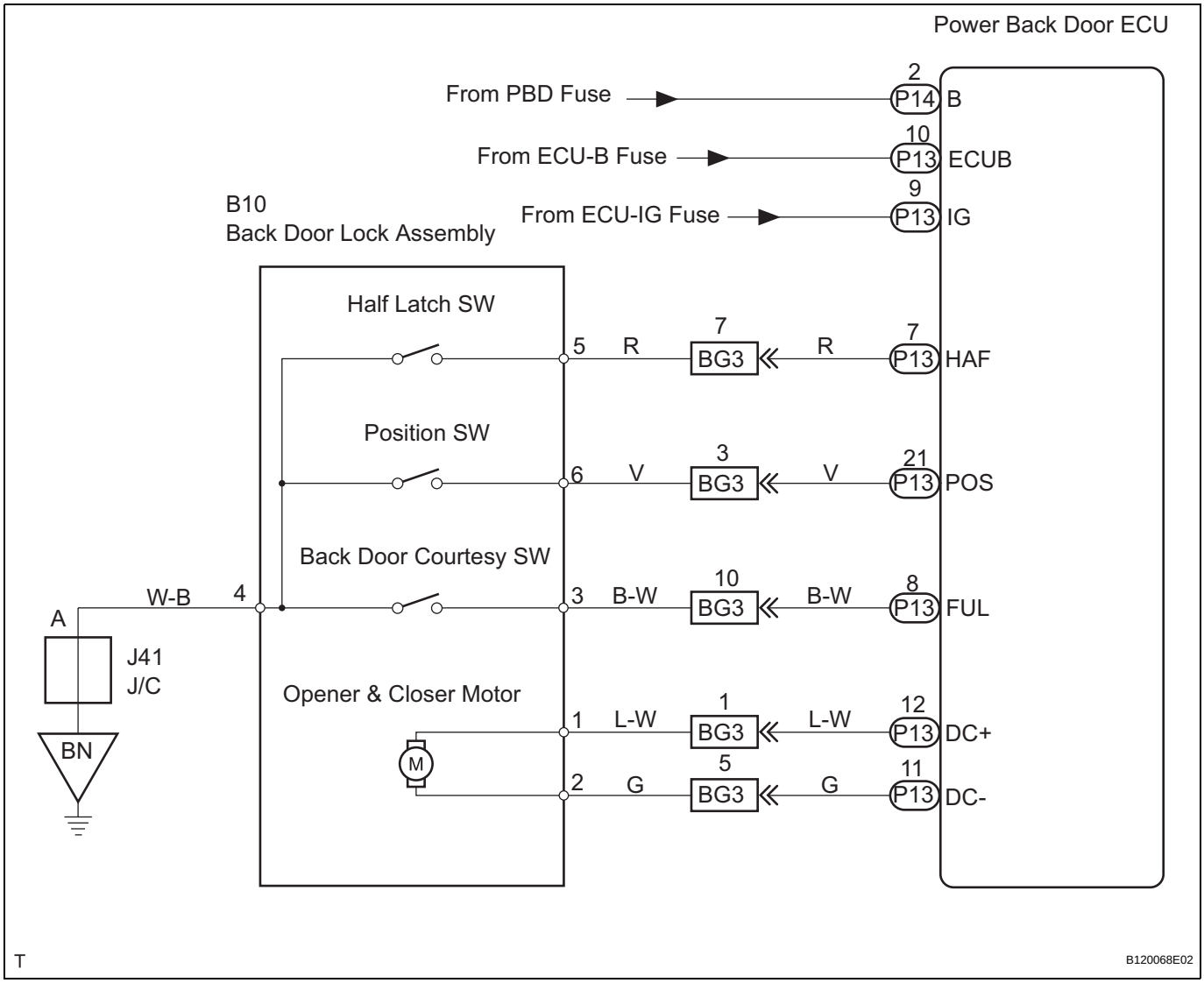

ED

INSPECTION PROCEDURE

1	INSPECT BACK DOOR LOCK

(a) Check that the back door fully closes (fully locked) when the door is closed by hand.

NG → **IMPROPER FIT OF BACK DOOR, OR A FOREIGN OBJECT IS STUCK IN BACK DOOR**

OK

2	POWER SOURCE RESET

(a) Disconnect the ECU-B fuse and reconnect it. 10 seconds later, check whether the back door closer is operational.

OK → **NORMAL**

NG

3	INSPECT BACK DOOR LOCK ASSEMBLY

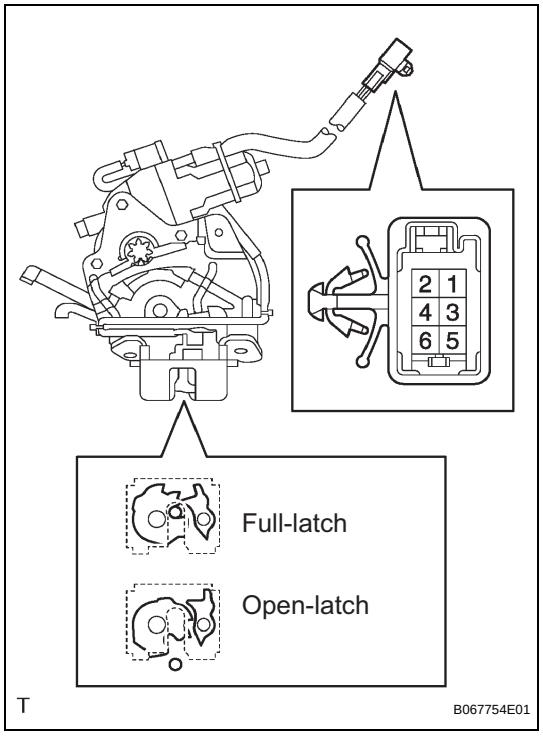

(a) Check operation of the door lock.
  (1) Using a screwdriver, push the latch in order to put the back door lock in the locked condition (full-latch position).
  (2) Connect the battery positive (+) lead to terminal 1 and the battery negative (-) lead to terminal 2. Then, check operation of the latch.
  OK:
  The latch turns to the open-latch position
  (3) Inspect motor operation when battery voltage is applied to the terminals.
  OK

Measurement Condition	Specified Condition
Battery positive (+) → Terminal 2 Battery negative (-) → Terminal 1	Clockwise (Motor in normal rotation)
Battery positive (+) → Terminal 1 Battery negative (-) → Terminal 2	Counterclockwise (Motor in reverse rotation)

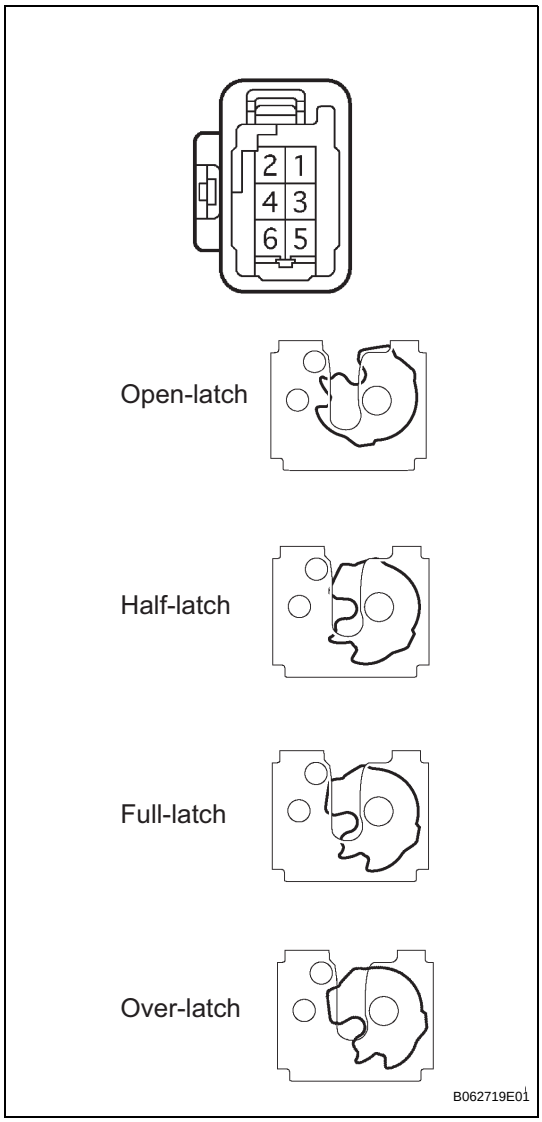

OK

(b) Check the back door courtesy switch resistance.
(1) Check the resistance between the terminals of the courtesy switch.
Resistance

Door Lock Latch Position	Terminal No.	Specified Condition
Open-latch position, Half-latch position	3 - 4	Below 1 Ω
Full-latch position, Over-latch position		10 kΩ or higher

(c) Check the back door latch switch resistance.
(1) Check the resistance between the terminals of the latch switch.
Resistance

Door Lock Latch Position	Terminal No.	Specified Condition
Open-latch position, Over-latch position	4 - 5	Below 1 Ω
Half-latch position, Full-latch position		10 kΩ or higher

(d) Check the position switch resistance.
(1) Connect the battery positive (+) lead to connector terminal 1 and the negative (-) lead to connector terminal 2.
Resistance

Door Lock Latch Position	Terminal No.	Specified Condition
Any position other than motor stop position (Motor in operation)	4 - 6	Below 1 Ω
Motor stop position (Gear in original position)		10 kΩ or higher

NG → **REPLACE BACK DOOR LOCK ASSEMBLY**

4	CHECK WIRE HARNESS (BACK DOOR LOCK ASSEMBLY - POWER BACK DOOR ECU)

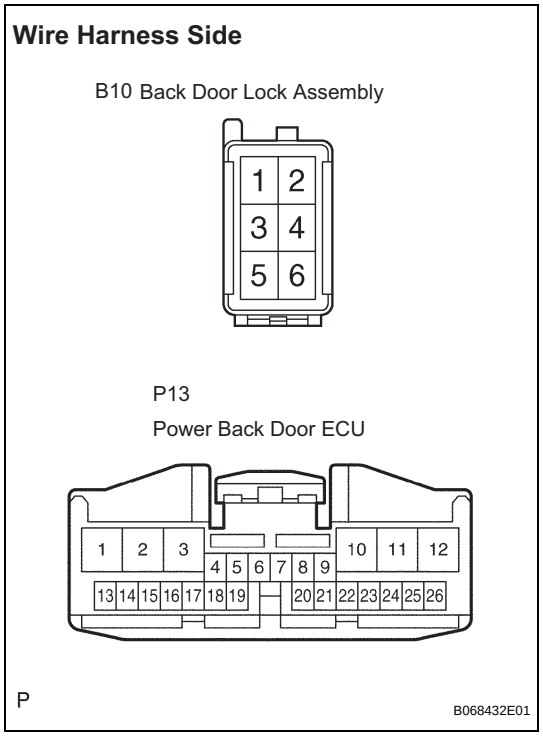

(a) Disconnect the B10 lock and P13 ECU connectors.
(b) Check the resistance between the wire harness side connectors.

Resistance (Check for open circuit)

Terminal No.	Specified Condition
B10-5 - P13-7 (HAF)	Below 1 Ω
B10-6 - P13-21 (POS)	
B10-3 - P13-8 (FUL)	
B10-1 - P13-12 (DC+)	
B10-2 - P13-11 (DC-)	

(c) Check the resistance between the B10 lock connector and body ground.

Resistance (Check for open circuit)

Terminal No.	Specified Condition
B10-4 - Body ground	Below 1 Ω

NG → **REPAIR OR REPLACE HARNESS AND CONNECTOR**

OK

REPLACE POWER BACK DOOR ECU