Power Back Door Warning Buzzer does not Sound

DESCRIPTION

- The power back door system uses a warning buzzer built into the back door, which has 3 ways of sounding that are used differently according to the situations:
  (a) When all the following conditions are met, the warning buzzer sounds at a cycle of 0.3 seconds:
    * The ignition switch is turned ON.
    * The shift lever is moved into any position except P position.
    * The back door is open or the power back door is activated to open.
      The warning buzzer continues to sound until the back door is fully closed or the shift lever is moved into the P position.
  (b) While the power back door is operating, the warning buzzer sounds at a cycle of 0.7 seconds. The warning buzzer turns off when the power back door stops. This way of sounding is set to OFF at factory (default setting) and can be customized when required.
  (c) When the power back door is activated to open, the warning buzzer that notifies the start of opening of the power back door sounds at 2 cycles of 0.5 seconds. At the start of opening of the power back door, a wireless buzzer (built into the engine room) also sounds.
- The power back door ECU directly sends a signal to the warning buzzer.

HINT:

- Only item 2 can be customized (See page ED-131).
- If all items occur at the same time, item 1 is prior to the others.

WIRING DIAGRAM

See page ED-143.

INSPECTION PROCEDURE

1	PERFORM ACTIVE TEST BY INTELLIGENT TESTER

(a) Select the ACTIVE TEST and then check that the power back door warning buzzer operates.
HINT:
During the ACTIVE TEST, the intelligent tester sends a signal to the power back door ECU to drive the warning buzzer. If the warning buzzer operates, the warning buzzer itself and the wire harness between the warning buzzer and power back ECU are considered to be functioning normally.

OK (Power slide door ECU):

Item	Normal Condition	Diagnostic Note
PSD BUZZER	Power back door buzzer is sound OFF / ON	-

ED

OK → REPLACE POWER BACK DOOR ECU

NG

2	CHECK WIRE HARNESS (POWER BACK DOOR WARNING BUZZER WIRE HARNESS SIDE)

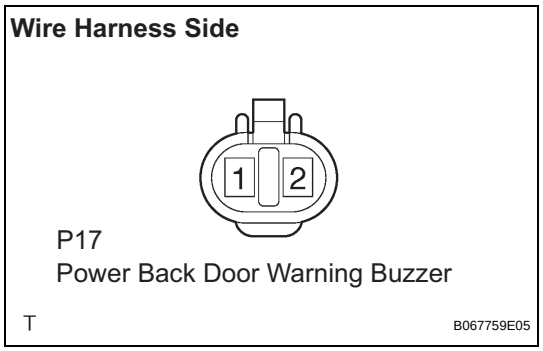

(a) Remove the buzzer connector.
(b) Inspect the buzzer connector side voltage.

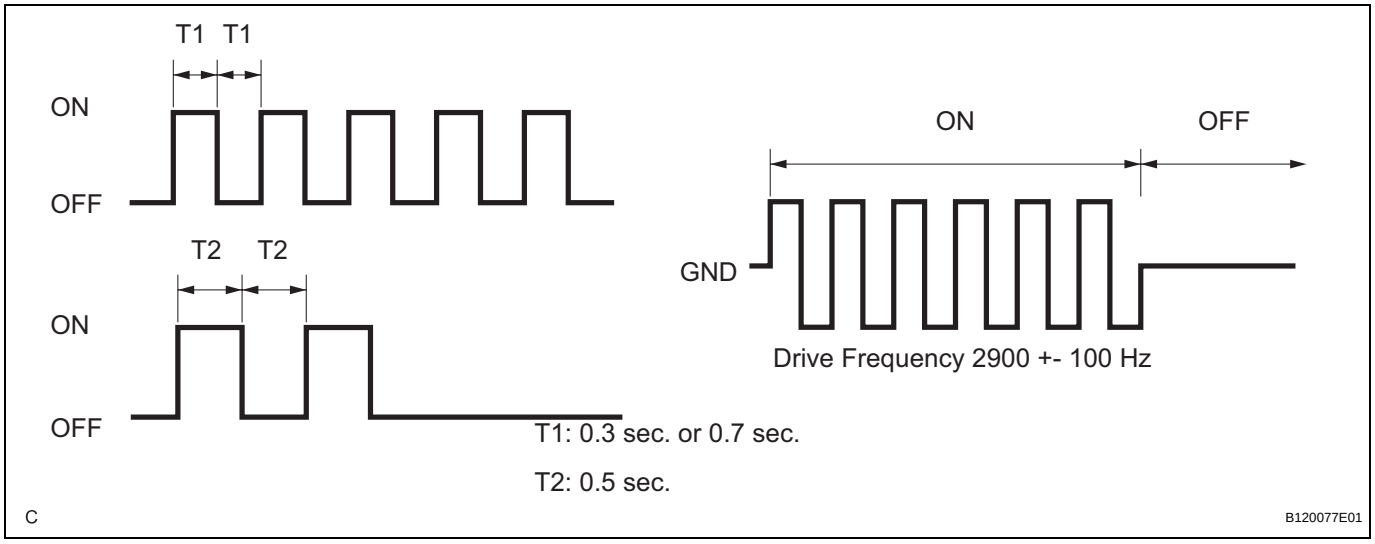

NOTICE:
Use an oscilloscope to check the output voltages of the buzzer.

Voltage

Terminal No.	Measurement Condition	Specified Condition
P17-1 - Body ground	Condition that causes buzzer to sound are met (See CIRCUIT DESCRIPTION)	•10 to 14 V (a cycle of 0.3 sec. or 0.7 sec.) •10 to 14 V (2 cycles of approx. 0.5 sec.)

NG → Go to step 4

OK

3	INSPECT POWER BACK DOOR WARNING BUZZER

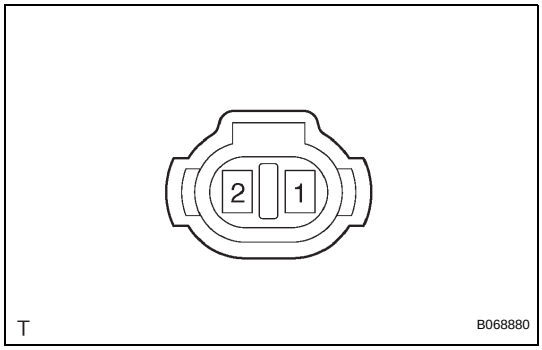

(a) Check the resistance of the buzzer.
Resistance

Terminal No.	Specified Condition
1 - 2	Approx. 1 kΩ

NOTICE:
- **The circuit that causes the buzzer to sounds is built into the back door ECU, not around the buzzer.**
- **Directly applying battery voltage to the buzzer does not cause the buzzer to sound.**

NG → **REPLACE POWER BACK DOOR WARNING BUZZER**

OK

4	CHECK WIRE HARNESS (POWER BACK DOOR WARNING BUZZER - POWER BACK DOOR ECU)

Wire Harness Side

P17 Power Back Door Warning Buzzer

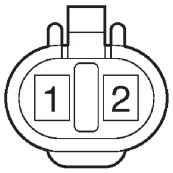

P13 Power Back Door ECU

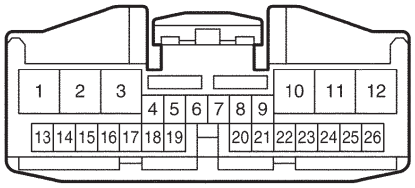

(a) Disconnect the P17 buzzer and the P13 ECU connectors.
(b) Check the resistance between the wire harness side connectors.
Resistance (Check for open circuit)

Terminal No.	Specified Condition
P17-1 - P13-2 (BZR+)	Below 1 Ω
P17-2 - P13-1 (BZR-)	

NG → **REPAIR OR REPLACE HARNESS AND CONNECTOR**

OK

REPLACE POWER BACK DOOR ECU

ED